Allied Vision

Mako G-419

- Power over Ethernet
- IEEE 1588 PTP
- Trigger over Ethernet
- Compact design

Small and powerful

Ultra-compact GigE Vision cameras

Mako G-419 with CMOSIS/ams CMV4000 runs 26.0 frames per second at 4.2 MP resolution.

Mako is an attractively priced GigE Vision-compliant camera in a compact rugged industrial housing. Many models include advanced functionalities such as Precision Time Protocol (PTP), Trigger over Ethernet (ToE) Action Commands, and Power over Ethernet (PoE). Screw mount RJ45 connector and multiple I/Os facilitate your straightforward system integration. Mako cameras are also avilable as Near Infrared (NIR) and polarizer variants.

Easy software integration with Allied Vision's Vimba Suite and compatibility to the most popular third party image-processing libraries.

See the Modular Concept for lens mount, housing variants, optical filters, case design, and other modular options. See the Customization and OEM Solutions webpage for additional options.

Specifications

	Mako G-419
Interface	IEEE 802.3 1000BASE-T, IEEE 802.3af (PoE)
Resolution	2048 (H) × 2048 (V)
Sensor	CMOSIS/ams CMV4000
Sensor type	CMOS
Shutter mode	Global shutter
Sensor size	Type 1
Pixel size	5.5 µm × 5.5 µm

Allied Vision

Mako G-419	
Lens mount (default)	C-Mount, CS-Mount
Max. frame rate at full resolution	26 fps
ADC	12 Bit
Image buffer (RAM)	64 MByte
Imaging performance	
Imaging performance data is based on the evaluation methods in the EMVA 1288 Release 3.1 standard for characterization of image sensors and cameras. Measurements are typical values for monochrome models measured at full resolution without optical filter. Contact Sales or AE for more information.	
Quantum efficiency at 529 nm	74 %
Temporal dark noise	13.0 e^-
Saturation capacity	9700 e^-
Dynamic range	57.1 dB
Absolute sensitivity threshold	13.5 e^-
Output	
Bit depth	8/12 Bit
Monochrome pixel formats	Mono8, Mono12, Mono12Packed
YUV color pixel formats	YUV411Packed, YUV422Packed, YUV444Packed
RGB color pixel formats	RGB8Packed, BGR8Packed
Raw pixel formats	BayerGB8, BayerGB12, BayerGB12Packed
General purpose inputs/outputs (GPIOs)	
Opto-isolated I/Os	1 input, 3 outputs
Operating conditions/dimensions	
Operating temperature	+5 °C to +45 °C housing temperature
Power requirements (DC)	10.8 to 26.4 VDC AUX or 802.3at Type 1 PoE
Power consumption	2.3 W at 12 VDC; 2.7 W PoE
Mass	80 g (with C-Mount)
Body dimensions (L × W × H in mm)	60.5 × 29.2 × 29.2 (including connectors)
Regulations	CE: 2014/30/EU (EMC), 2011/65/EU, including amendment 2015/863/EU (RoHS); FCC Class B; CAN ICES-003

Allied Vision

Quantum efficiency

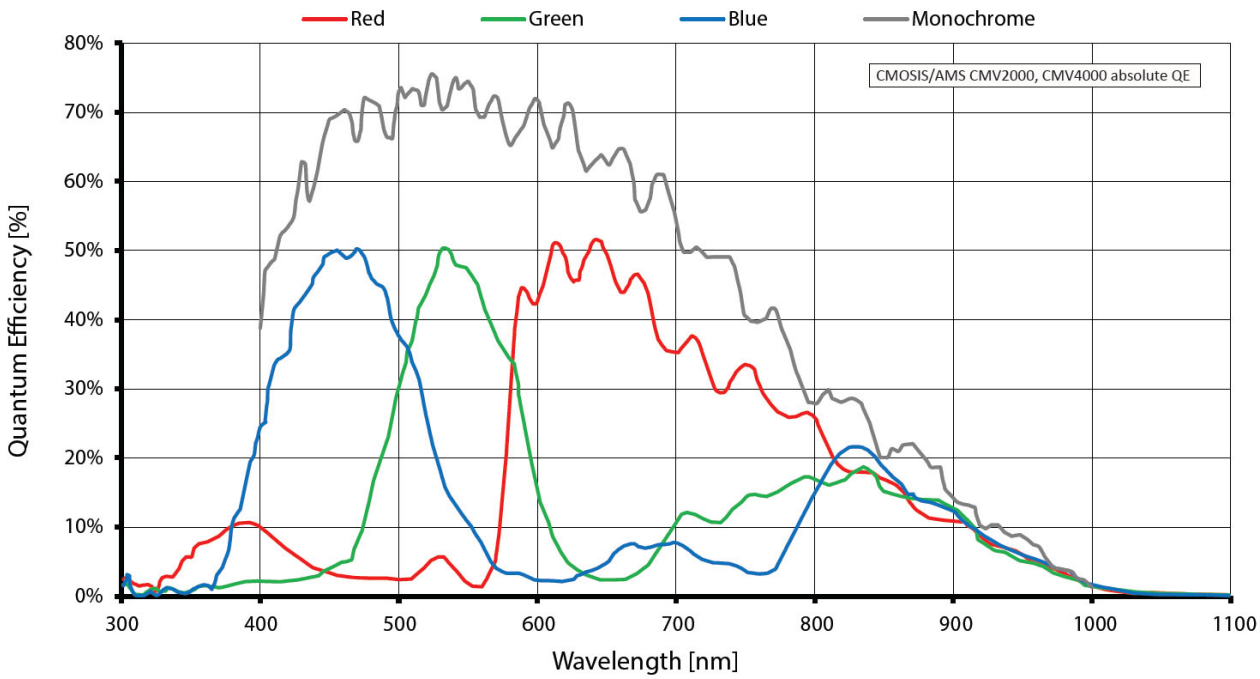

Features

Image control: Auto

- Auto exposure
- Auto gain
- Auto white balance (color models)

Image control: Other

- Black level
- Color transformation (incl. hue, saturation; color models)
- DPC (defect pixel correction)
- Gamma
- HDR mode
- LUT (look-up table)

- ROI (region of interest)

Camera control

- Acquisition frame rate
- Bandwidth control
- Event channel
- Firmware update in the field
- I/O and trigger control
- Image chunk data
- PTP (IEEE 1588 Precision Time Protocol)
- Stream hold
- Temperature monitoring
- ToE (trigger over Ethernet, action commands)
- User sets

Allied Vision

Technical drawing

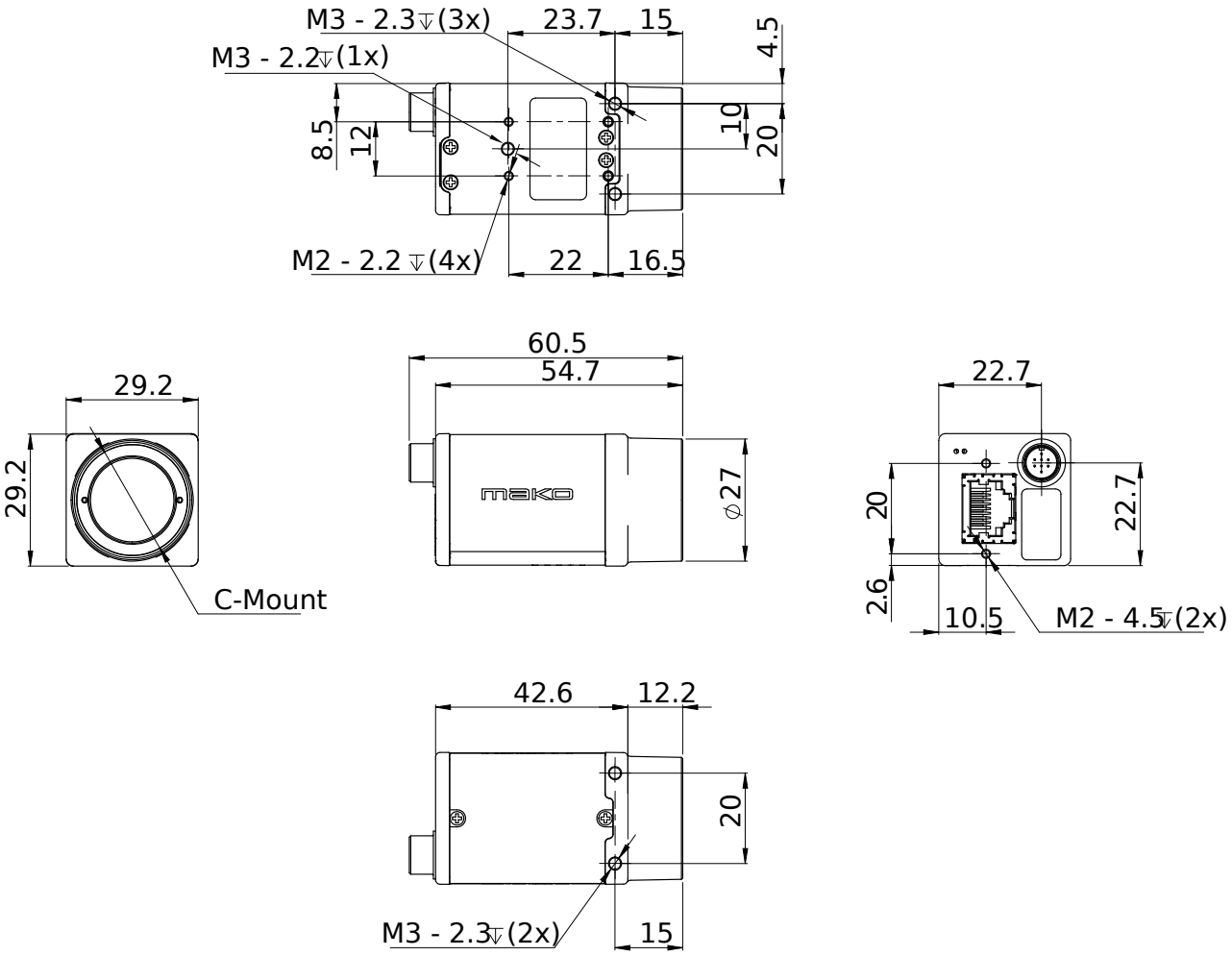

Applications

Mako G is suitable for all typical applications in machine vision:

- Robotics
- Quality control
- Inspection, surveillance
- Industrial imaging
- Machine vision
- Logistics