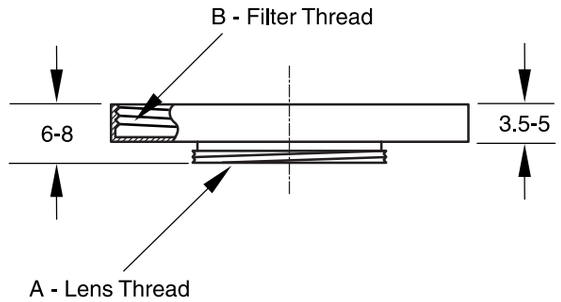

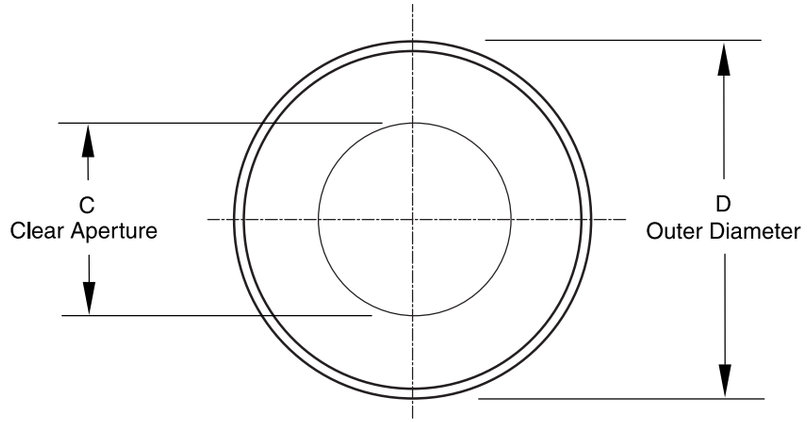

NOTES: 1. Material is silver or black anodized aluminum.
2. Not to scale. Dimensions in mm ±0.5mm.

Step-up #	A LENS THREAD	B FILTER THREAD	C CLEAR APERTURE	D OUTER DIAMETER
SU25.5-46	M25.5 x P0.5	M46 x P0.75	22.5	48
SU27-46	M27 x P0.5	M46 x P0.75	24	48
SU30.5-46	M30.5 x P0.5	M46 x P0.75	27.5	48
SU34-46	M34 x P0.5	M46 x P0.75	31	48
SU37-46	M37 x P0.75	M46 x P0.75	33.2	48.5
SU37.5-46	M37.5 x P0.5	M46 x P0.75	34.5	48
SU39-46	M39 x P0.5	M46 x P0.75	36.5	48
SU40.5-46	M40.5 x P0.5	M46 x P0.75	37.5	48
SU43 -46	M43 x P0.75	M46 x P0.75	40	48

smart vision lights

Step-up Ring

Part No.: SUXX-XX

Sept. 2017