Allied Vision

GigE Vision & Camera Link SWIR Cameras

Goldeye G/CL

Technical Manual

V4.1.6

Allied Vision Technologies GmbH // Taschenweg 2a, 07646 Stadtroda/Germany

2019-Sep-01

Table of contents

Goldeye G/CL at a glance

Read this document carefully

Learn to avoid damage to your Goldeye and use it in the most safe and efficient way.

Contents of your delivery

Your Goldeye delivery consists of the following items:

Shipping box
Camera Goldeye
Download Instruction for first camera operation

What else do you need?

The following references provide additional documentation and software.

Documents	Where to find it
Goldeye G/CL Features reference	www.alliedvision.com/fileadmin/content/documents/products/cameras/various/features/Goldeye_GigE_CL_Features_Reference.pdf

Software	Where to find it
Vimba	www.alliedvision.com/en/products/software.html

Accessories	Where to find it
Power supply I/O connector Ethernet adaptors, Camera Link cables	You find a list of all accessories necessary to run the camera in Adapters and connectors on page 133.

Contact Allied Vision

Website

To directly contact Allied Vision with any inquiry, go to:

www.alliedvision.com/en/meta-header/contact

To find an Allied Vision office or distribution partner, go to:

www.alliedvision.com/en/about-us/where-we-are

Support and general inquiries

For all camera-related queries contact us at support@alliedvision.com

For all general inquiries, contact us at info@alliedvision.com

Sales offices

• Europe, Middle East, and Africa	T// +49 36428 677-230
• North and South America	Toll-free: +1 877 USA 1394 California: +1 408 721 1965 T// +1 978 225 2030
• Allied Vision Asia-Pacific	T// +65 6634 9027
• Sales Office China	T// +86 21 64861133

Headquarters

Allied Vision Technologies GmbH
Taschenweg 2a
07646 Stadtroda
Germany

T// +49 36428 677-0
F// +49 36428 677-28

Geschäftsführer (Managing Directors): Andreas Gerk, Peter Tix

Document history and conventions

This chapter includes:

- Document history
- Conventions used in this manual

This **Goldeye G/CL Technical Manual** describes the technical specifications and operating principle of the Goldeye camera family (Allied Vision product codes 4068xxx, 4168xxx, 6068xxx, and 6168xxx), including feature overview, dimensions, I/O definition, pixel formats, image processing and IR-specific data processing, basic and advanced parameters, and settings, as well as bandwidth and frame rate related subjects.

Document history

Version Date	Document updates
V4.1.6 2019-09-01	Editorial revision to improve usability
V4.1.5 2019-Jul-09	Extended description of TID correction. Updated Spectral Sensitivity plots. Editorial changes.
V4.1.4 2019-Apr-30	Specifications : Included three Gain levels of G/CL-033 TEC1 and TECless models. Upgraded the description of filters.
V4.1.3 2019-Mar-15	Specifications : Updated power consumption data. Specifications : Added standards used for successful shock and vibration testing. Specifications : Added Gain factor to Image and Performance table. Accessories: Updated accessories tables. Temperature control: Added section Recommended Environment for Goldeye TECless. Temperature control: Extended the section Neutralization of the Temperature Influence. Minor editorial changes.
V4.1.2 2018-Sep-12	Added link to application note Using the Goldeye G/CL LUT for image processing. Updated contact information. Updated installation information.
V4.1.1 2018-Jul-26	Applied several editorial corrections.

Table 1: Document history (sheet 1 of 3)

Version Date	Document updates
V4.1.0 2018-May-08	**Firmware** version 02.18.20213 Added functions to models G/CL-008 TEC1 and G/CL-008 Cool TEC1: • Modified temperature readout with increased precision (reduced `T_readout` noise). • Ability to heat the sensor in a new mode. • New feature `SensorTemperatureTargetSetpoint` that allows to hold one sensor temperature over a very wide range of conditions.
V4.0.0 2018-Mar-20	**Firmware** version 02.16.19998 **New models:** CL-008 Cool TEC1, G-008 Cool TEC1, CL-032 Cool TEC2, CL-033 TECless, G-033 TECless. **Editorial changes:** Improved pin assignment description of 12-pin Hirose connector, added Hirose pin number to input and output block diagrams. Added the TEC level to each model name throughout the document; also added detailed description of model naming. Included the Installation Manual for both GigE and CL models into the Technical Manual.
V3.3.0 2017-Jun-14	**Firmware** version 02.14.19002 Added automatic contrast functionality. Added TID correction. Updated formulas for maximum frame rate. Applied multiple small changes.
V3.2.0 2016-Dec-01	Included multiple minor updates. Applied result of language check. Restructured technical data and specifications .
V3.1.2 2016-Nov-17	Corrected drawing of the Goldeye G-032 Cool power connector pin assignment.
V3.1.1 2016-Aug-25	Corrected formulas for frame rate calculation of Goldeye CL-032, CL-033.

Table 1: Document history (sheet 2 of 3)

Version Date	Document updates
V3.1.0 2016-Jun-30	**Firmware** version 02.12.17558 Added automatic exposure functionality. Added capability to change Camera Link timing parameters including clock frequency.
V3.0.0 2016-Feb-29	**Firmware** version 2.10.16613 **New models**: CL-008, CL-032, CL-033.
V2.0.0 2015-Aug-24	**Firmware** version 02.08.15169 **New model**: G-008 Complete implementation of new corporate layout. Introduction of look-up table and binning into the firmware.
V1.3.0 2015-Mar-20	**Firmware** version 02.06.06 **New model**: G-033. Extended the description of image corrections.
V1.2.0 2014-Nov-07	Updated to new brand name and new brand logo.
V1.1.0 2014-Oct-24	**Firmware** version 02.04.04 **New model**: G-032 SWIR Cool Introduction of automatic non-uniformity correction. Introduced new chapter Resolution and ROI.
V1.0.0 2014-Jul-11	**Firmware** version 02.02.02 **New camera family**, first model: Goldeye G-032 First release of the document.

Table 1: Document history (sheet 3 of 3)

Conventions used in this manual

To give this manual an easily understandable layout and to emphasize important information, the following typographical styles and symbols are used:

Styles

Style (example)	Function
Emphasis	Some important parts or items of the text are emphasized to make them more visible.
`Features and registers names`	GigE features names and Camera Link register names are displayed as monospaced text.
`Features and registers options`	Features options and register's options that are selectable by the user are displayed as monospaced italicized text.
`InputCommand`	Text or command to type in by the user, selected menu options, or other selectable options.
`SourceCode`	Code words of programs and code examples, used in running text. Mainly designated for use in software documentation.
UIElement	Text that is displayed, or output, by the system for the user, like parts of the GUI, dialog boxes, buttons, menus, important information, or windows titles.
WebReference	References to other documents or web pages, like weblinks, hypertext links, emails, but also cross references, that include a link the user can follow by clicking.

Table 2: Markup conventions used in this manual

Symbols and notes

Practical Tip

This symbol highlights a practical tip that helps to better understand the camera's features and functions, and to make better use of it.

Further information available online

This symbol highlights URLs for further information. The URL itself is shown in blue.

Example:

www.alliedvision.com

Safety-related instructions to avoid malfunctions

This symbol indicates important or specific instructions or procedures that are related to product safety. You need to follow these instructions to avoid malfunctions.

Compliance, safety, and intended use

This chapter includes:

- Compliance notifications for the following areas:
  - Europe (CE)
  - USA (FCC)
  - Canada (ICES)
- Information about application and intended use of the camera.

Compliance notifications

For customers in Europe

Allied Vision has demonstrated the fulfilment of the requirements relating to the Goldeye G/CL camera family:

- Directive 2014/30/EU (Electromagnetic compatibility)
- Directive 2011/65/EU, incl. amendment 2015/863/EU (RoHS)

For customers in the USA

United States of America: Supplier Declaration of Conformity

Goldeye G/CL cameras comply with Part 15 of the FCC Rules. Operation is subject to the following two conditions:

1. This device may not cause harmful interference, and
2. this device must accept any interference received, including interference that may cause undesired operation.

Responsible Party – U.S. Contact Information

Allied Vision Technologies, Inc, 102 Pickering Way – Suite 502, Exton, PA 19341, Telephone +1 978 225 2030

Class B digital device

Note: This equipment has been tested and found to comply with the limits for a Class B digital device, pursuant to part 15 of the FCC Rules. These limits are designed to provide reasonable protection against harmful interference in a residential installation. This equipment generates, uses and can radiate radio frequency energy and, if not installed and used in accordance with the instructions, may cause harmful interference to radio communications. However, there is no guarantee that interference will not occur in a particular installation. If this equipment does cause harmful interference to radio or television reception, which can be determined by turning the equipment off and on, the user is

encouraged to try to correct the interference by one or more of the following measures:

- Reorient or relocate the receiving antenna.
- Increase the separation between the equipment and receiver.
- Connect the equipment into an outlet on a circuit different from that to which the receiver is connected.
- Consult the dealer or an experienced radio/TV technician for help.

We caution the user that changes or modifications not expressly approved by the party responsible for compliance could void the user's authority to operate the equipment.

For customers in Canada

This apparatus complies with the Class B limits for radio noise emissions set out in the Radio Interference Regulations.

CAN ICES-3 (B)/NMB-3(B)

Pour utilisateurs au Canada

Cet appareil est conforme aux normes classe B pour bruits radioélectriques, spécifiées dans le Règlement sur le brouillage radioélectrique.

CAN ICES-3 (B)/NMB-3(B)

Avoid electromagnetic interferences

For all power and interface connections, only use shielded cables or cables recommended by Allied Vision.

Camera applications and intended use

General use

- The user is responsible for operating the camera within the specifications that are defined in this document, and within appropriate environmental conditions and technical prerequisites, to ensure trouble-free camera operation.
- The camera is compliant with current data communication standards; however, those standards do not allow for self-monitoring. Thus, the camera cannot be used as a standalone device for security-related monitoring operations.
- The camera is a hardware product. Only when used with appropriate accompanying software, the camera will produce the desired results. The realization of intelligent solutions requires additional software that is suitable to run with the camera.
- The camera is a component, it is neither a complete product, nor is it a ready-made technical solution.
- The camera-supporting software can be obtained and installed separately from the camera. Usage of the software is solely the responsibility of the user.
- The camera must not be opened. For all repair tasks, contact Allied Vision or one of Allied Vision's authorized representatives.
- Observe the intended use. The camera must only be used for purposes that are in conformity with the stated intended use.
- Additionally, refer to the warranty information on the Allied Vision website.
- For usage in product with specific safety requirements a Quality Assurance Agreement with Allied Vision is required.
- The camera is intended for use in a commercial, industrial, or business environment. The test phase and programming should be carried out by advanced users.

Use in medical devices

The camera provides basic adequacy to be used in medical devices as well, however, is not specially designated for operation in medical devices. When used as part of a medical device, a review of the specific application is necessary. For usage in medical product, a Quality Assurance Agreement with Allied Vision is required. Users who integrate the camera into an application must comply with the rules and regulations concerning medical devices.

Copyright and trademarks

Installation and hardware **GigE**

This chapter builds on the information available in the installation guide of your **Goldeye GigE** camera.

It includes:

- additional information for configuring the host computer
- a description of the components required for your vision system, including configuring the host computer, Ethernet adapter settings, and connecting your **Goldeye GigE** camera.

Getting started

The hardware and installation instructions in this chapter are applicable to all cameras of the Allied Vision Goldeye G family. Follow the link to learn more about GigE cameras from Allied Vision.

www.alliedvision.com/en/products/cameras.html#interfacefilter%2F3%2Fseries%2F59%2F

Optics

Allied Vision Goldeye G cameras provide lens mounts in various sizes for installing a lens: C-Mount, F-Mount, and M42-Mount. You can order lenses for IR cameras directly from Allied Vision or from an Allied Vision distribution partner. Users need to select the desired focal length and appropriate optical format for the target camera model.

Modular Concept

The Allied Vision Modular Concept provides more information on lens mount options for specific Allied Vision GigE cameras:

www.alliedvision.com/en/support/technical-documentation.html

GigE Vision software

Allied Vision provides the Vimba SDK software package that support our GigE Vision cameras.

Download software

Vimba is Allied Vision's future-proof SDK for all current and upcoming Allied Vision cameras with Camera Link, GigE Vision, FireWire (IEEE 1394), and USB Vision interfaces. Follow the link for more information.

www.alliedvision.com/en/products/software.html

Allied Vision GigE cameras are GigE Vision v1.2 compliant. This means they are compatible with third-party software that offers a GigE Vision driver.

Overview of installation

This is an overview of the installation process: follow the links on this page to read the step-by-step instructions.

- Install Gigabit Ethernet network card and configure network card (Jumbo Frames, Receive Descriptors, Performance Options, and IP address settings):
  See Configuring the host computer on page 25.
- Install the Allied Vision Vimba SDK plus corresponding Viewer:
  See Installing camera software.
- Connect camera to PC or laptop and ensure that the camera is powered:
  See Connecting your camera on page 30.
- Acquiring your first image with the Allied Vision Vimba Viewer:
  See Using Allied Vision viewer applications.

Mounting the camera

You can attach the camera to a base in two ways:

1. To attach the camera to any horizontal or vertical base, four mounting threads M4 x 6 mm are located on each side of the camera, except for the back side.
   - Refer to the drawings in chapter Camera dimensions on page 121 for the exact distances between the mounting threads.
   - To avoid damaging the camera housing, we recommend using bolts with an effective length of 4 to 6 mm and apply a maximum torque of 2.0 Nm to each bolt.
2. To attach the camera to the common mounting plate of tripods used in photography, a 1/4- 20 UNC mounting thread is located on the camera bottom.

Configuring the host computer

Allied Vision GigE Vision cameras can operate on 10/100 or Gigabit speed Ethernet adapters. To reach the maximum camera frame rate, a Gigabit speed Ethernet adapter with jumbo packet support is required.

If your host computer has an available Ethernet interface, this can be used with Allied Vision GigE cameras. We recommend that your camera system uses a dedicated Ethernet interface not shared with internet or local area networks. If more interfaces are needed, or your existing Ethernet adapter is unable to operate at Gigabit Ethernet speeds, installing additional hardware may be required.

- For desktop systems, install a PCI Express bus Ethernet adapter.
- For laptops, use an expansion slot via a Gigabit Ethernet Express card.

Usage on mixed-use networks (with printers, internet or email, and other devices) is possible but may impact camera performance, for example, frame rate. Check with your IT administrator if required for network configuration.

Compatible interface slot

Verify that there is an available and compatible interface slot on the host computer before purchasing the desired Ethernet adapter card.

Ethernet adapters

For a list of Ethernet adapters available for purchase from Allied Vision, please contact Allied Vision sales representative or your local Allied Vision distribution partner:

www.alliedvision.com/en/about-us/where-we-are

A list of Allied Vision recommended Ethernet adapters is available on the Allied Vision website.

www.alliedvision.com/fileadmin/content/documents/products/cameras/various/appnote/Hardware_Selection_for_Allied_Vision_GigE_Cameras.pdf

Installing the Ethernet adapter driver

Install the network card driver from your network card manufacturer. Read the frame grabber software installation guide provided by the frame grabber manufacturer. If no installation application is provided, update the driver manually.

Updating the driver manually

1. Click the **Start** icon and select *`Control Panel`* in the menu.
2. Click *`View by Large Icons`* and select *`Device Manager`* in the list.

3. Under **Network Adapters**, locate the Ethernet network adapter, right-click the entry, and select *Update Driver Software* in the menu.
4. Select the *Search automatically for updated driver software* or *Browse my computer for driver software*.
5. Click *Close* once the driver has been installed.

Modifying Ethernet adapter IP address

After initial Ethernet adapter hardware installation, connect the Ethernet adapter directly to the camera. The default configuration assigns an IP address automatically, using the Link-Local Address range of 169.254.xxx.xxx. If a DHCP server is present, this will define the address.

Users can fix the adapter address to minimize the time required for a camera to be recognized by the host application.

To connect to the camera, edit the host PC's adapter settings and configure the following settings:

- IP Address: 169.254.100.1
- Subnet mask: 255.255.0.0
- Default gateway: blank

Systems that employ multiple Ethernet adapters connected to multiple cameras will also be required to fix the address of the Ethernet adapter. Each network interface card or network interface card port requires a unique IP address.

	IP Address	Subnet mask	Default gateway
NIC 1	169.254.100.1	255.255.0.0	(blank)
NIC 2	169.254.100.2	255.255.0.0	(blank)
NIC 3	169.254.100.3	255.255.0.0	(blank)

Table 3: Configuration examples for systems that employ multiple NICs

Optimizing the Ethernet adapter

The Ethernet adapter should be adjusted to improve system performance when using a GigE Vision camera. This performance is related to minimizing CPU usage and dropped or resent packets.

Edit the Ethernet adapter driver properties according to the values in Table 4 . The names and availability of the properties listed may vary depending on adapter manufacturer and model.

Allied Vision GigE camera's default factory settings configure the camera packet size to 8228. The host adapter needs to support a packet size of equal or larger size to stream from the camera.

Property	Value
Packet size	8228 bytes or larger
Interrupt Moderation	Enable
Interrupt Moderation Rate	Extreme
Transmit buffers	256 bytes
Receive buffers	Max setting available

Table 4: Ethernet adapter performance settings

If adapter packet size support is limited to 1500 bytes, as on 10/100 speed NICs, you can reduce the camera packet size using Vimba Viewer and saved to an on-board camera power up config file. See `SavedUserSets` in the GigE Features Reference.

Jumbo packets

The properties listed for the network adapter may include either *`Jumbo Packet`* or *`Jumbo Frames`*, depending on the manufacturer. If neither is listed under properties, your network card may not support this feature. You must use a network adapter that supports Jumbo Frames/Jumbo Packets.

The Ethernet adapter settings may also vary depending on your system configuration and the network adapter manufacturer.

Enabling jumbo packets

1. Click the **Start** icon and select **Control Panel** in the menu.
2. Click *`View by Large Icons`* and select *`Device Manager`* in the list.
3. Under **Network Adapters**, locate the Ethernet network adapter, right-click the entry, and select *`Properties`* in the menu.
4. Select the *`Advanced`* tab.
5. Select the property *`Jumbo Packet`* and set the value to *`9014 Bytes`*.

6. Click *OK* to save the setting.

Support by various Gigabit Ethernet cards

The settings list in the advanced adapter settings may vary between various types and brands of Gigabit Ethernet network cards. Common expressions are Jumbo Frames or Jumbo Packet.

If Jumbo Frames or Jumbo Packet does not appear in this list, your network card may not support it. Without this capability, you may not be able to achieve the full performance of the camera. Refer to chapter Technical specifications on page 56 for details on power consumption.

Installing viewer software

Allied Vision software

All software packages provided by Allied Vision are free of charge and contain the following components:

- Drivers
- Software Development Kit (SDK) for camera control and image acquisition
- Examples based on the provided APIs of the SDK
- Documentation and release notes
- Viewer application to operate and configure the cameras

Vimba Viewer documentation

Vimba Viewer documentation is included with the software download. Once Vimba Viewer is installed on your host PC, documentation is located under \Program Files\Allied Vision\Vimba.

Third-party software

In addition to the software provided by Allied Vision, there are numerous GigE Vision standard compliant third-party software options available. In general, third-party software provides increased functionality such as image processing and video recording.

Allied Vision’s Vimba SDK is based on the GenICam standard. GenICam-based third-party software automatically connects with Vimba's transport layers. Additionally, Vimba includes the Cognex Adapter for VisionPro.

Connecting your camera

Accessories

Use a Category 5e or higher rated Ethernet cable to connect the Goldeye camera to the host adapter.

Overview of all available accessories:

Allied Vision provides accessories to run and connect the Goldeye. To obtain an overview of all accessories available, go to the Allied Vision Accessories webpage:

www.alliedvision.com/en/products/accessories.html

Camera drivers

Allied Vision GigE cameras work with any or all of the following software options.

Vimba Viewer or Vimba SDK:

www.alliedvision.com/en/products/software

Third-party software solutions:

www.alliedvision.com/en/products/software/third-party-libraries.html

Powering up the camera

To power up the camera, plug the 12-pin Hirose connector into the camera and wait for the boot phase to complete. For Cool models, use the 4-pin Hirose connector. The boot phase is indicated by a steady flashing of the Ethernet status LEDs.

For all available power supply options and all suitable connectors refer to Power supplies on page 133.

Connecting to host application

Once you have installed the Vimba Viewer or third-party application to your host computer, you can connect your Allied Vision GigE camera via an Ethernet Category 5e cable or higher. If your camera is not PoE powered, connect the Hirose cable to power the camera.

Launch the application

1. Power up the camera and wait until the Ethernet Status LEDs stop blinking. This indicates booting has been finished.
2. Launch the Vimba Viewer application and wait for the camera to appear in the **Detected Cameras** list. This may take a few seconds, depending on the number of cameras connected to the PC.
3. Select the desired camera from **Detected Cameras** list.
4. A new camera window appears, as shown in Figure 1 .

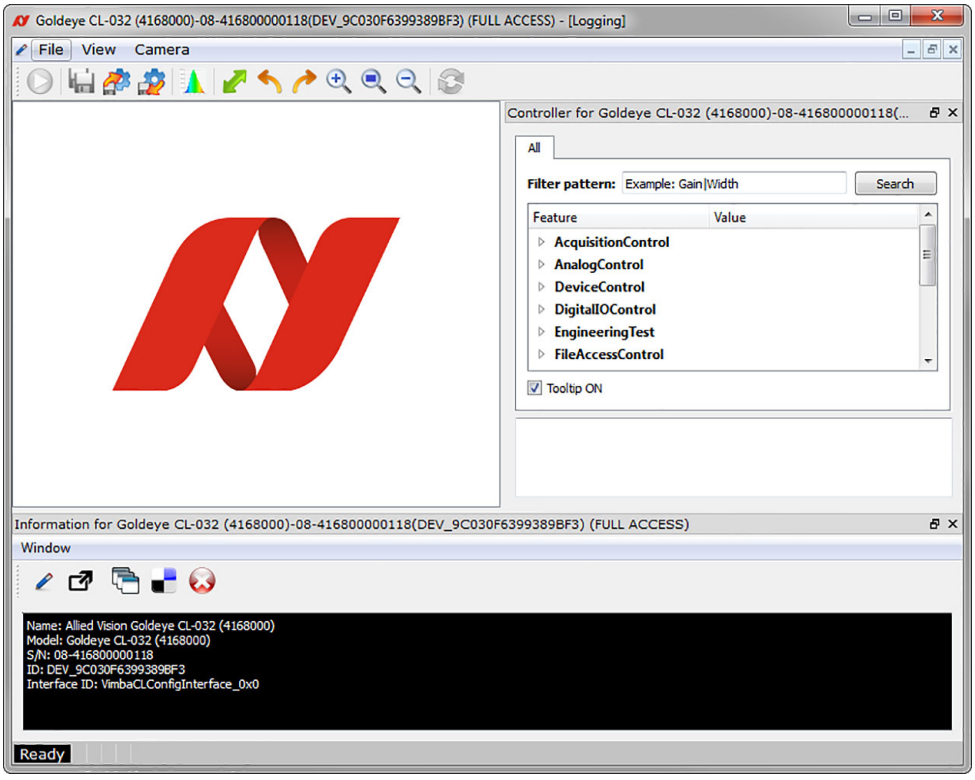

Figure 1: Vimba Viewer

Acquiring images

To start continuous image acquisition, using default camera settings, click on the **freerun** button in the viewer toolbar. The **freerun** button is used to start and stop the live view.

Troubleshooting

Questions and answers

Is the camera getting power?

Check the GigE status LED at the GigE port on the backside of the camera. Once the camera is booted, the green LED remains lit as long as the camera is connected to power.

The status LED codes for Goldeye G cameras are described in the section GigE status LEDs on page 160.

Additional references

Product webpage:

www.alliedvision.com/en/products/cameras.html

Vimba SDK:

www.alliedvision.com/en/products/software.html

Knowledge base:

www.alliedvision.com/en/support/technical-papers-knowledge-base.html

Software download:

www.alliedvision.com/en/support/software-downloads.html

Case studies:

www.alliedvision.com/en/applications

Firmware:

To obtain the latest firmware for Goldeye cameras, contact our technical support team:

www.alliedvision.com/en/support/contact-support-and-repair.html

Installation and hardware **CL**

This chapter includes:

- Installing hardware and software
- Starting the camera
- Camera control and image viewing
- Troubleshooting

Getting started

The hardware and installation instructions in this chapter are applicable to all cameras of the Allied Vision Goldeye CL family. Follow the link to learn more about Camera Link cameras from Allied Vision.

www.alliedvision.com/en/support/technical-papers-knowledge-base.html

Optics

Allied Vision Goldeye CL cameras provide lens mounts in various sizes for installing a lens: C-Mount, F-Mount, and M42-Mount. You can order lenses for IR cameras directly from Allied Vision or from an Allied Vision distribution partner. Users need to select the desired focal length and appropriate optical format for the target camera model.

Modular Concept

The Allied Vision Modular Concept provides more information on lens mount options for specific Allied Vision Camera Link cameras:

www.alliedvision.com/en/support/technical-documentation.html

Frame grabber

Almost every frame grabber compatible to Camera Link Base can be used to operate a Goldeye CL.

Usage of frame grabbers with Goldeye CL cameras

Refer to this application note for detailed requirements:

www.alliedvision.com/fileadmin/content/documents/products/cameras/Goldeye_2/appnote/Goldeye-Framegrabber_AppNote_en.pdf

Cables

Compatible Camera Link cables

A list of compatible Camera Link cables is provided on the Allied Vision website:

www.alliedvision.com/en/products/accessories/interface-cables.html#!?cameraInterfacefilter=9

Allied Vision software

Allied Vision provides the Vimba SDK for accessing all camera features to control the Goldeye CL. To acquire images the frame grabber SDK must be used.

Download software

Vimba is Allied Vision's future-proof SDK for all current and upcoming Allied Vision cameras with Camera Link, GigE Vision, FireWire (IEEE 1394), and USB Vision interfaces. Follow the link for more information:

www.alliedvision.com/en/products/software.html

Overview of installation

In this section, you find an overview of the installation process — follow the links on this page to read the step-by-step instructions.

- Install the frame grabber card and software:
  Refer to Installing a frame grabber on page 38.
- Install Vimba SDK plus corresponding Viewers:
  Refer to Installing camera software on page 38.
- Connect camera to frame grabber card and ensure that the camera is powered:
  Refer to Connecting to host computer on page 40.
- Use the Vimba Viewer to configure and control the camera. Use the frame grabber software to acquire images.
  Read Camera control and image viewing on page 41

Mounting the camera

You can attach the camera to a base in two ways:

1. To attach the camera to any horizontal or vertical base, four mounting threads M4 x 6 mm are located on each side of the camera, except for the back side.
   - Refer to the drawings in chapter Camera dimensions on page 121 for the exact distances between the mounting threads.
   - To avoid damaging the camera housing, we recommend using bolts with an effective length of 4 to 6 mm and apply a maximum torque of 2.0 Nm to each bolt.
2. To attach the camera to the common mounting plate of tripods used in photography, a 1/4- 20 UNC mounting thread is located on the camera bottom.

Powering up the camera

To power up the camera, plug the 12-pin Hirose connector into the camera and wait for the boot phase to complete. For Cool models, use the 4-pin Hirose connector. The boot phase is indicated by a steady flashing of the Camera Link status LED.

For all available power supply options and all suitable connectors refer to Power supplies on page 133.

Installing hardware and software

Installing a frame grabber

For the installation of a frame grabber, the computer must meet the minimum system requirements of the frame grabber.

Find the requirements in the technical manual of the frame grabber.

Refer also to the frame grabber installation manual provided by the manufacturer regarding installation details.

Installing frame grabber software

Read the frame grabber software installation guide provided by the frame grabber manufacturer.

More information about frame grabbers:

For more information about compatibility of various frame grabber models and system installation refer to the application note *Usage of Frame grabbers with Goldeye CL Cameras,* which is downloadable from the Allied Vision website:

www.alliedvision.com/en/support/technical-documentation/goldeye-gcl-documentation.html

Technical information and support:

To receive advice on suitable frame grabbers for your application, contact the Allied Vision support team.

support@alliedvision.com

Installing camera software

This section presents instructions for software installation specific to Windows 7. Goldeye CL cameras can be operated under later versions of Windows as well. Allied Vision offers Vimba as the main SDK for its Camera Link cameras.

To install the Vimba SDK plus corresponding Vimba Viewer, read Installing Vimba Viewer on Windows on page 39.

Note that currently there is no Linux support for Camera Link with Vimba.

Frame grabber configuration files

Some frame grabbers applications use configuration files to setup the grabber for a certain camera. Allied Vision can provide files for the Goldeye CL series for various frame grabbers.

For more information, contact the Allied Vision support team.

support@alliedvision.com

Download Vimba Viewer

Download the Vimba SDK for Windows and for Linux from the Allied Vision website:

www.alliedvision.com/en/products/software.html

Installing Vimba Viewer on Windows

You can install the Vimba Viewer on Windows 7, Windows 8.1, and Windows 10. To install the Vimba Viewer on Windows, follow these steps:

Step 1: To start the installation, run the file Vimba_v2.0_Windows.exe.

Step 2: Select an installation level suitable for you.

Step 3: Click **Start**. The installer will guide you through the installation process.

Starting the camera

Powering up the camera

To power up the camera, plug the 12-pin Hirose connector into the camera and wait for the boot phase to complete. For Cool models, use the 4-pin Hirose connector. The boot phase is indicated by a 1 Hz steady green-red flashing of the Camera Link status LED.

For all available power supply options and all suitable connectors refer to Power supply on page 155.

For Camera Link LED color and flashing pattern, refer to Camera Link status LED on page 164.

Connecting to host computer

To connect the camera to the host application, use a Camera Link cable with an SDR-26 connector for the camera side.

To retrieve information about the required connector type for the frame grabber (either MDR-26 or SDR-26), refer to the frame grabber manual.

More on accessories:

For more information on accessories contact Allied Vision sales representative or your local Allied Vision distribution partner:

www.alliedvision.com/en/about-us/where-we-are.html

For a list of compatible Camera Link cables, go to the Allied Vision website:

www.alliedvision.com/en/products/accessories/interface-cables.html#!?camerainterfacefilter=9

Camera control and image viewing

Vimba with frame grabber specific viewer

Overview

Vimba offers a GenTL compatible configuration transport layer to access a GenCP compatible Camera Link camera. This transport layer offers access to all camera features and is used to setup and control a camera.

The Vimba Viewer is used as control application only. Images of the camera are grabbed via the viewer application that comes with the frame grabber software installation.

Figure 2 shows the corresponding block diagram.

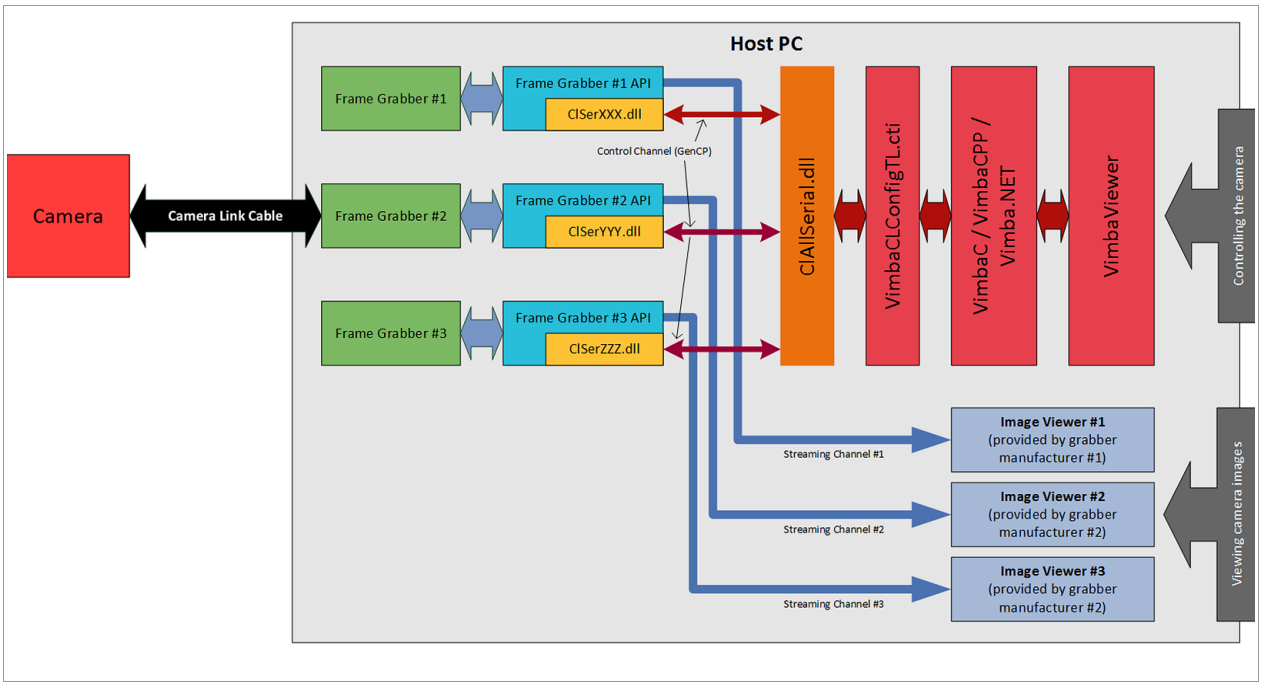

Figure 2: Vimba Config TL block diagram

Adjusting the transfer speed for your frame grabber

Not all frame grabbers support the same maximum data transfer speed. The maximum bit rate supported by various frame grabbers is vastly different. Therefore, the default bit rate for use of Vimba with Camera Link is set to the minimum bit rate of 9600 bits per second.

If your frame grabber supports a higher bit rate, it is advantageous to increase the bit rate in Vimba to the highest bit rate that the frame grabber supports.

Take note when changing the transfer speed

- Always change the bit rate using Vimba. Do not try to change the bit rate from within the camera, this might cause the camera to stop working and require a restart.
- The steps outlined below are applicable for Vimba, they are not applicable for any frame grabber SDK.

To increase the bit rate, follow these steps:

Step 1: Open the file VimbaCLConfigTL.xml. You find it in the VIMBA_HOME directory, which is typically one of the following (for Vimba 2.1- adjust the path for Vimba 2.0 accordingly).

- C:\Program Files\Allied Vision\Vimba_2.1\VimbaCLConfigTL\bin\Win32
- C:\Program Files\Allied Vision\Vimba_2.1\VimbaCLConfigTL\bin\Win64

These XML files include the modifiable settings, by default the bit rate is denoted as follows:

```
<DefaultBaudRate>9600</DefaultBaudRate>
```

Set this number to the highest bit rate that your frame grabber supports, the highest possible value is `912600` bits per second.
Save the file and close.

Step 2: Restart Vimba and restart the Goldeye CL.

Result: All operations requiring data exchange, especially a firmware update, increase significantly in speed.

Launch the applications

1. Power up the camera and wait until the Camera Link Status LED stops blinking. This indicates booting is completed.
2. Launch the Vimba Viewer application and wait for the camera to appear in the **`Detected Cameras`** list. This may take a few seconds, depending on the

number of cameras connected to the PC and the number of installed frame grabbers.

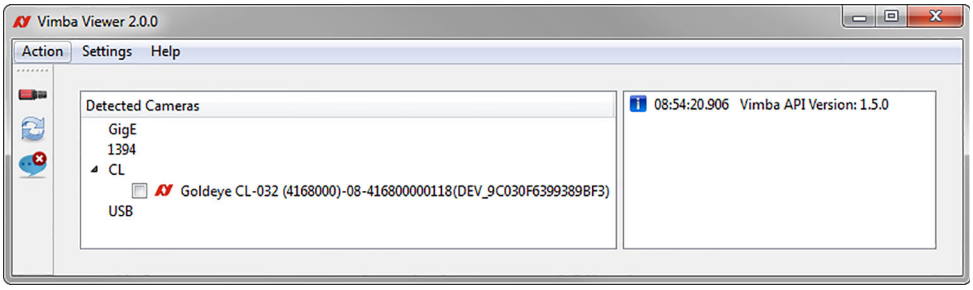

Figure 3: Vimba Viewer - camera detection window

If the camera does not appear after some time, check the following:

- Is the camera connected to the correct grabber port? If the frame grabber has two CL connectors it should be connected to port 1.
- Has the camera been powered up and booted completely before the Vimba Viewer was started? The boot process is indicated by a 1 Hz green-red flashing of the CL status LED. After booting has been finished the LED stays green. It starts flickering in one of the following cases.
  - serial communication is taking place
  - images are transferred to the host

3. Select the desired camera from **`Detected Cameras`** list.
4. A new camera window appears, as shown in Figure 4 on page 44. This camera window consists of the following components:
   - Viewer toolbar: controls to customize the live camera view
   - Controller window: shows camera controls
   - Information window: displays camera and event information
   - Camera stats: Statistical information
5. Launch the viewing application provided by frame grabber manufacturer.

No Plug and Play mechanism

Camera Link does not provide a Plug and Play mechanism. If a camera is attached to the frame grabber after the transport layer is loaded (during start of Vimba Viewer), the new camera will not be detected. If a camera is removed after it has been opened it can also not be detected. The **`Refresh`** button in the Vimba Viewer does not detect a new Camera Link camera.

Because the transport layer is for controlling the camera only, the Vimba Viewer window does not show a live image. Therefore, the histogram window will also not show any data. Image display and analysis is done via applications provided by the frame grabber manufacturer.

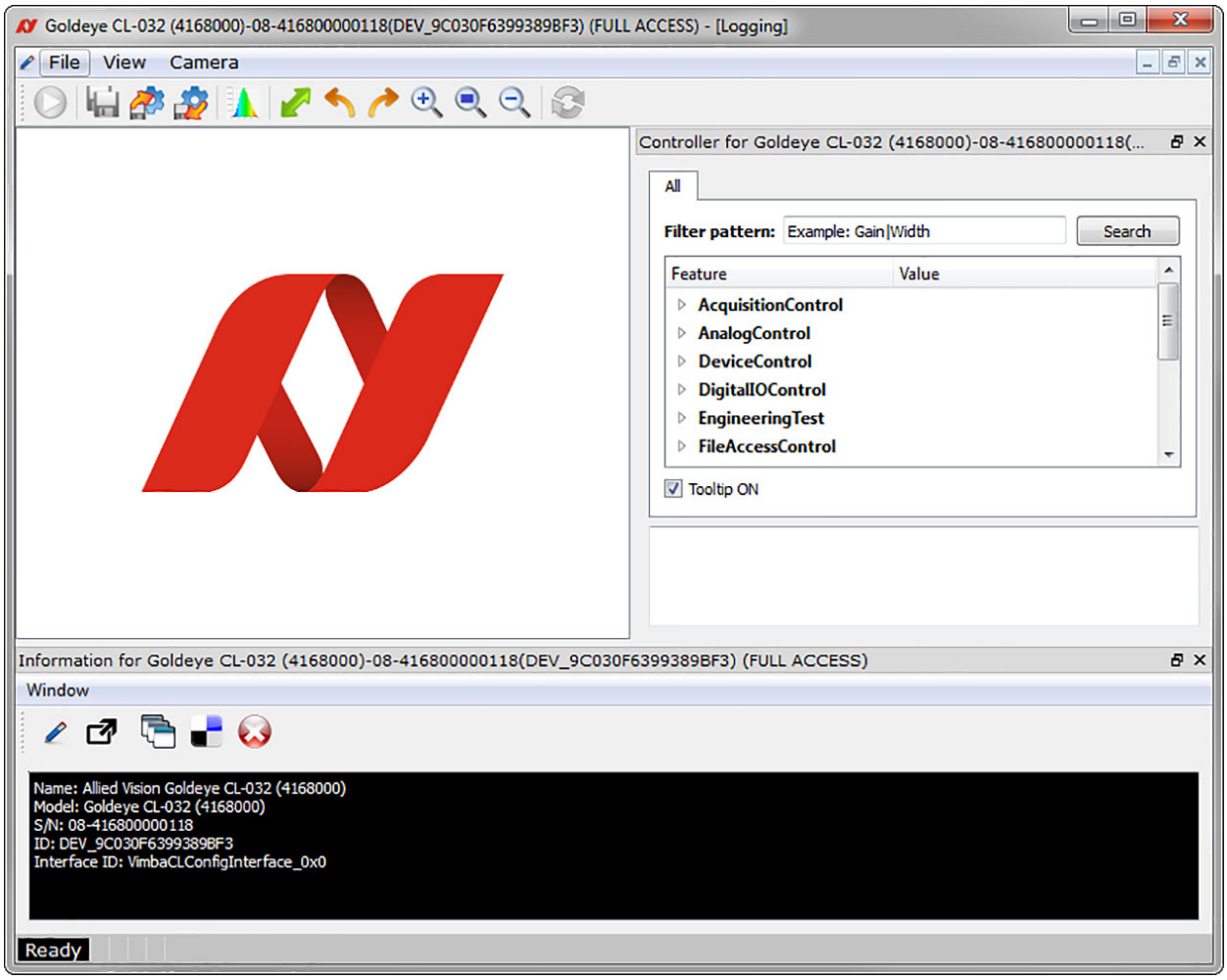

Figure 4: Vimba Viewer window

Dockable Layout:

The camera window supports a fully dockable layout that allows user to customize their workspace.

If components are missing in camera window:

If any of the components of the camera window shown above is missing, then do the following:

- Right-click on menu or toolbar
- Select the missing component

Adjust camera controls: Controller window

The controller window is displayed in the top right section of the Vimba window, refer to Figure 4 on page 44. It is used to configure the camera frame rate, exposure time, pixel format, and much more.

Explanation of camera controls:

A detailed explanation of camera controls is available in the Goldeye G/CL Features Reference available at

www.alliedvision.com/en/support/technical-documentation/goldeye-cl-documentation.html

Grabbing images

To grab images, use the viewer application provided by the frame grabber manufacturer. It is necessary to configure the viewer application regarding the incoming image format of the camera.

Best practice:

1. Set the features `Width`, `Height`, and `PixelFormat` of the camera within the Vimba Viewer controller window.
2. Configure the equivalent parameters of the incoming image format for the frame grabber with the frame grabber viewing application identically.
3. Use the Vimba Viewer features `AcquisitionStart` and `AcquisitionStop` to start and stop image acquisition.

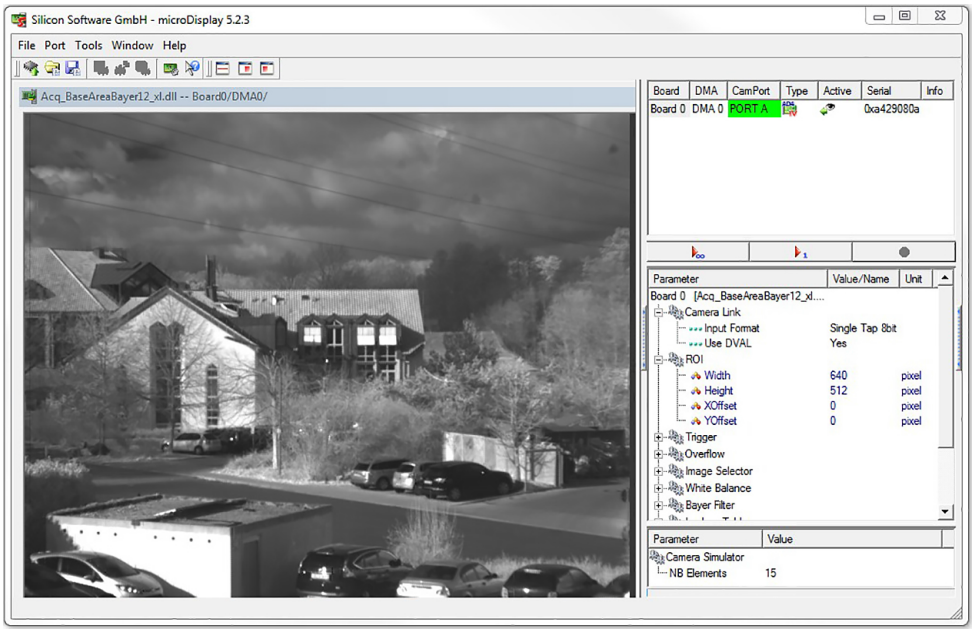

Figure 5: Example frame grabber viewer application

Grabber configuration files:

You can adjust the image parameters within the application or via an external grabber configuration file, depending of the used frame grabber.

Refer to the frame grabber documentation for more information on parameter adjustment.

To obtain frame grabber configuration files, contact our technical support team:

support@alliedvision.com

Camera information: Information window

The information window is displayed in the bottom section of the Vimba window, see Figure 8 on page 48. It consists of the functionalities described below.

To open the Logging window, click the logging icon, shown left. The logging window provides camera identifying information including the serial and ID number.

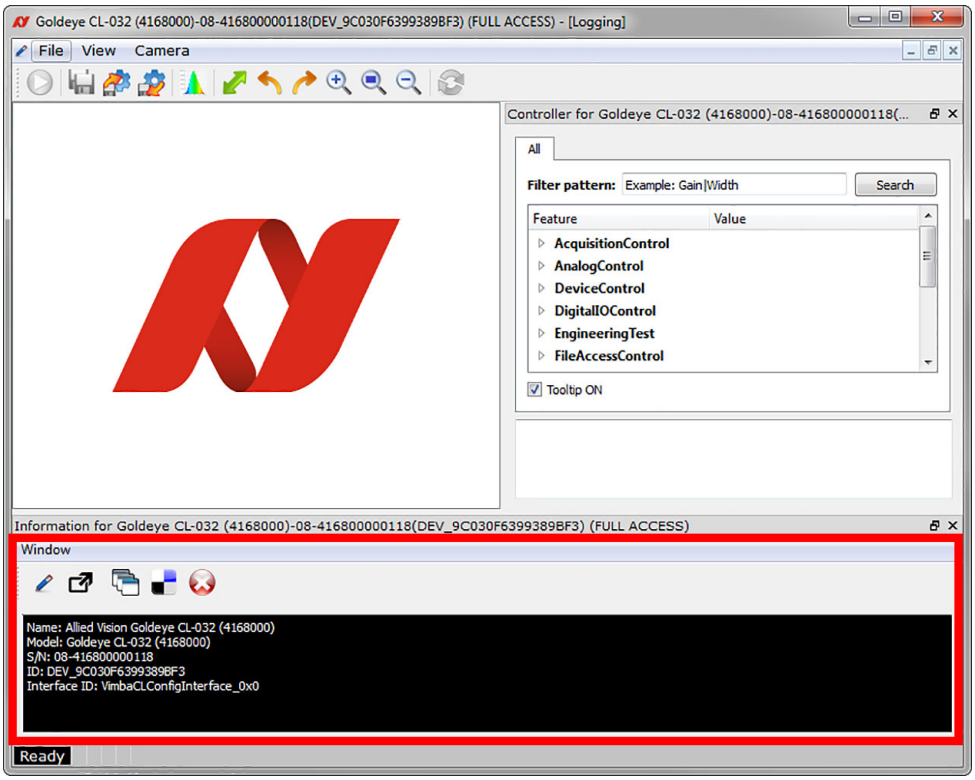

Figure 6: Vimba Viewer with logging window

Using a custom application

It is possible to access the Goldeye CL camera without using the Vimba configuration transport layer. In this case the custom application must open the COM port of the grabber via the clallserial.dll (or clserXXX.dll) to establish a communication channel between the host and the camera. The protocol used for communication with the camera is GenICam GenCP.

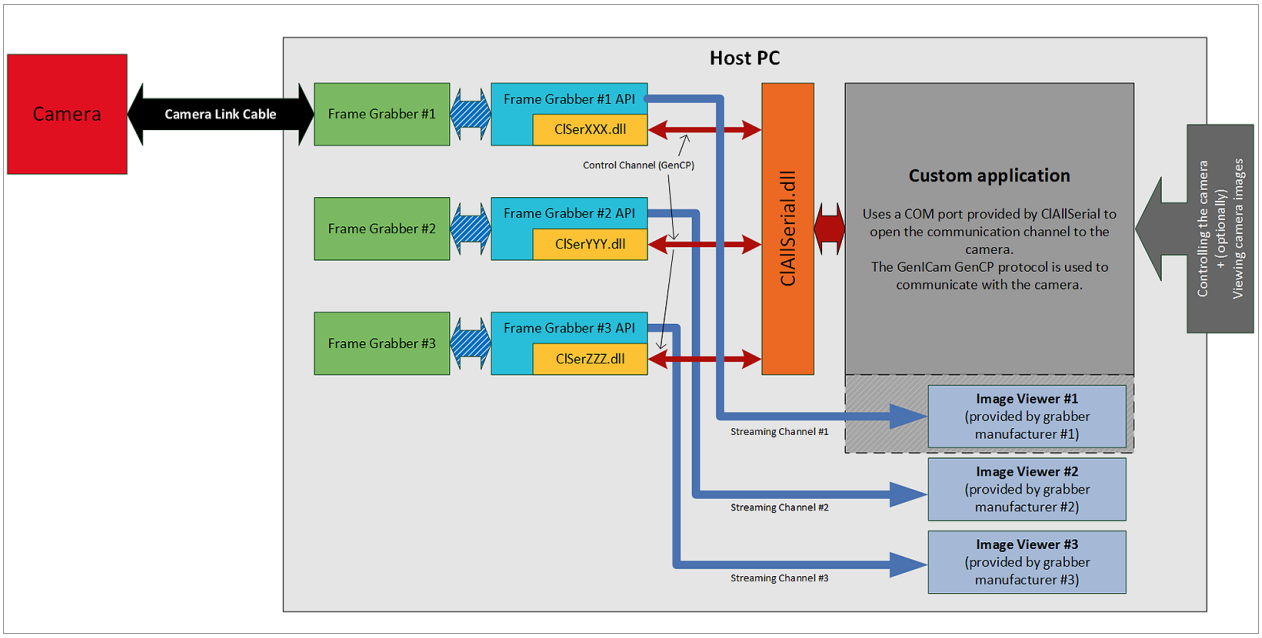

Figure 7: Custom GenCP application block diagram

Applicable standards

Two standards are applicable:

- The Camera Link Specification V2.0. You can download it from the AIA website: www.visiononline.org/vision-standards-details.cfm?type=6
- The GenICam GenCP V1.1. You can download it from the EMVA website: www.emva.org/standards-technology/genicam/genicam-downloads/

Using frame grabber transport layer

Some frame grabber manufacturers come with their own Camera Link transport layer. In this case the Vimba Viewer is not necessary to control the camera.

Adjusting camera features and grabbing images is handled via an application from the frame grabber manufacturer.

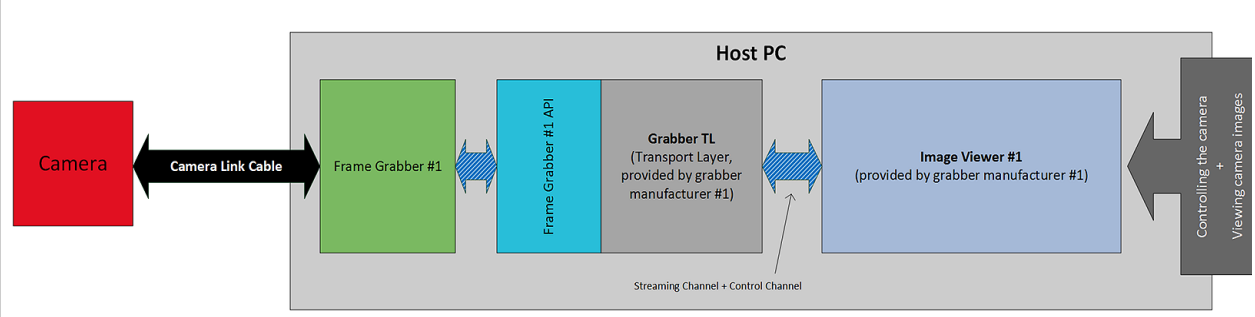

Figure 8: Frame grabber transport layer block diagram

Troubleshooting

Questions and answers

Is the camera getting power?

Check the Camera Link status LED underneath the CL port on the backside of the camera. If the camera is connected to power, the LED displays a steady green color.

The status LED codes for Goldeye CL cameras are described in the section Camera Link status LED on page 164.

Is the camera powered, but not detected in viewer?

- **Is the camera connected to the correct grabber port?**
  If the frame grabber has two CL connectors, it should be connected to port 1. If the frame grabber has two CL connectors, it does not necessarily mean that it is a DUAL-BASE grabber. Refer to the frame grabber manual for more information.
- **Has the camera been powered up and booted completely before the Vimba Viewer was started?**
  During the boot process the CL status LED underneath the cameras CL port flashes with 1 Hz in green-red. After booting has been finished, the LED stays green.

Note that no Plug and Play mechanism is available with Camera Link. If a camera is attached to the frame grabber after the transport layer is loaded (during start of Vimba Viewer), the new camera will not be detected. If a camera is removed after it has been opened it can also not be detected.

Is the camera listed in viewer, but images cannot be acquired?

- Compare the incoming image format of the frame grabber with the parameters set in the camera. Verify that width, height, and pixel format expected by the frame grabber are equal at the camera side.
- Check if the frame grabber tap configuration is the same as the camera tap configuration (Feature `DeviceTapGeometry`).

Additional references

Product webpage:

www.alliedvision.com/en/products/cameras.html

Vimba SDK:

www.alliedvision.com/en/products/software.html

Knowledge base:

www.alliedvision.com/en/support/technical-papers-knowledge-base.html

Software download:

www.alliedvision.com/en/support/software-downloads.html

Case studies:

www.alliedvision.com/en/applications

Firmware:

To obtain the latest firmware for Goldeye cameras, contact our technical support team:

www.alliedvision.com/en/support/contact-support-and-repair.html

Specifications

This chapter includes:

- Technical specifications , advanced features, and measured Absolute Quantum Efficiency diagrams for each Goldeye G and CL model
- Frame rates that result when changing the resolution from minimum to maximum ROI, listing of frame rates achievable with common video formats, and an explanation of frame rate calculation
- Technical drawings and dimensions of all Goldeye models including available lens mount adapters
- Information about sensor position accuracy

Technical overview

Frame rates and temperature control

Table 5 displays a summary of the key sensor specifications of all Goldeye models. For more detailed information about temperature control in Goldeye cameras, refer to the section on Temperature control on page 207.

Models	Key specifications
CL-008 TEC1 G-008 TEC1	InGaAs FPA 320 × 256 344 fps FPA cooling and heating: TEC1, Min. ΔT = 20K
CL-008 Cool TEC1 G-008 Cool TEC1	InGaAs FPA 320 × 256 344 fps FPA cooling and heating: TEC1, Min. ΔT = 30K
CL-032 TEC1 G-032 TEC1	InGaAs FPA 636 × 508 100 fps FPA cooling: TEC1, Min. ΔT = 30K
CL-032 Cool TEC2 G-032 Cool TEC2	InGaAs FPA 636 × 508 100 fps FPA cooling: TEC2, Min. ΔT = 60K
CL-033 TEC1 G-033 TEC1	InGaAs FPA 640 × 512 301 fps FPA cooling: TEC1, Min. ΔT= 25K
CL-033 TECless G-033 TECless	InGaAs FPA 640 × 512 301 fps Without thermo-electric cooling (TECless)

Table 5: Goldeye key features

Models and modular options

Model	Product code C-Mount	Product code F-Mount	Product code M42-Mount
Goldeye CL-008 TEC1	4168080	4168081	4168083
Goldeye CL-008 Cool TEC1	4168580	[1]	[1]
Goldeye CL-032 TEC1	4168000	4168001	4168003
Goldeye CL-032 Cool TEC2	4168520	[1]	[1]
Goldeye CL-033 TEC1	4168030	4168031	4168033
Goldeye CL-033 TECless	4168730	[1]	[1]
Goldeye G-008 TEC1	4068080	4068081	4068083
Goldeye G-008 Cool TEC1	4068580	[1]	[1]
Goldeye G-032 TEC1	4068000	4068001	4068003
Goldeye G-032 Cool TEC2	4068520	4068521	4068523
Goldeye G-033 TEC1	4068030	4068031	4068033
Goldeye G-033 TECless	4068730	[1]	[1]

[1] Models with F-Mount adapter and M42-Mount adapter are available on request.

Table 6: Goldeye models and modular options

Shock and vibration testing standards

Goldeye G/CL cameras were successfully tested for compliance with the following standards:

- IEC 60068-2-6, Sinusoidal vibration testing
- IEC 60068-2-27, Non-repetitive shock testing
- IEC 60068-2-27, Repetitive shock testing
- IEC 60068-2-64, Random vibration testing

Model naming

In addition to family name and model name, the full designation of Goldeye models can express the temperature control or the housing as well.

Goldeye models are equipped with various active and passive temperature control devices, for example a Cool housing, or a TEC2, TEC1 or TECless sensor. These devices are not optional. Also, they are not combinable like a modular design.

When present, each of them constitutes a different Goldeye model. Therefore, they reflect in the naming or name affix of the model.

Name affix for housing size

Goldeye models are available in two different housing sizes. The larger, scientific models are denoted with the name affix **Cool**. In general, the Goldeye models with scientific design housing are referred to as Cool models.

Name affix	(none)	**Cool**
	(Industrial design)	(Scientific design)
		
Size	78 mm × 55 mm × 55 mm,	90 mm × 80 mm × 80 mm
Nitrogen chamber	No	Yes
Fan	No	Yes
Temperature control	TEC1 or TECless	TEC2 or TEC1

Table 7: Distinctions between Goldeye housing sizes

Examples

- Goldeye G-032 models are available with single-stage temperature control, and with two-stage temperature control in a Cool housing. They are named Goldeye G-032 TEC1 and Goldeye G-032 Cool TEC2, respectively.
- Goldeye CL-008 models are available with single-stage temperature control in both housing sizes. They are named Goldeye CL-008 TEC1 and Goldeye CL-008 Cool TEC1, respectively. Note that in this case it is impossible to distinguish both models without naming the housing size.

Name affix for temperature control

Goldeye models that are equipped with the same sensor may be available with different temperature controls. To make an unambiguous distinction possible, the temperature control is denoted in the model name.

Name affix	Description
TEC2	TEC2 models are equipped with a two-stage thermo-electric cooling.
TEC1	TEC1 models are equipped with a single-stage thermo-electric temperature control.
TECless	These models are not equipped with thermo-electric cooling.

Table 8: Distinction between Goldeye models with various TEC stages.

Note that Table 8 gives an overview of Goldeye model naming only. For more detailed information on temperature control, refer to Control of the sensor temperature on page 209.

Example

Goldeye CL-033 models are available with temperature stabilization and without temperature control. Names of these models are Goldeye CL-033 TEC1 and Goldeye CL-033 TECless, respectively. Note that it is impossible to distinguish both models without naming the TEC stage.

Technical specifications

Goldeye CL-008 SWIR TEC1

Imaging and performance

Parameter	Values
Sensor	InGaAs, progressive scan, electronic full frame shutter
Sensor type	Focal plane array (FPA)
Spectral range	900 nm to 1700 nm
Resolution	320 (H) × 256 (V)
Pixel size	30 µm × 30 µm
Effective chip size	9.6 mm × 7.68 mm
Dark current (@ +25 °C FPA temperature)	280 ke^-/s
Temporal dark noise (Gain0)	420 e^-
Temporal dark noise (Gain1)	170 e^-
Saturation capacity (Gain0)	2.5 Me^-
Saturation capacity (Gain1)	170 ke^-
Dynamic range (Gain0)	75 dB
Dynamic range (Gain1)	60 dB
Pixel operability	>99.5 %
Maximum frame rate at full resolution	344 fps
Exposure time	6 µs to 200 ms [1]
Temperature control	Single-stage thermo-electric cooling and heating (TEC1)
Analog gain levels	Gain0, Gain1
Gain factor	15
A/D converter	14-bit

[1] Maximum exposure value given is valid for Gain0 and sensor temperature of +25°C. Even longer exposures can be set, but the image quality may deteriorate.

Table 9: CL-008 SWIR TEC1 - Image and performance specifications (sheet 1 of 2)

Parameter	Values
Image buffer size	256 MB
Stream hold capacity	1524 frames at full resolution
[1] Maximum exposure value given is valid for Gain0 and sensor temperature of +25°C. Even longer exposures can be set, but the image quality may deteriorate.	

Table 9: CL-008 SWIR TEC1 - Image and performance specifications (sheet 2 of 2)

Output

Parameter	Values
Digital interface	Camera Link Base, up to 2 taps, 40 MHz, SDR-26 connector, Serial Control Channel
Bit depth	8-, 12-, 14-bit
Pixel formats	Tap geometry 1X 1Y: Mono 8, Mono 12, Mono 14 Tap geometry 1X2 1Y: Mono 8, Mono 12

Table 10: CL-008 SWIR TEC1 - Output specifications

General purpose inputs and outputs

Parameter	Values
Opto-isolated I/Os	1 input, 2 outputs
RS232	up to 115,200 bits/second, 8N1 (adjustable)
LVTTL I/Os	1 input, 1 output
LVDS inputs	CC1- CC4

Table 11: CL-008 SWIR TEC1 - General purpose input and output specifications

Mechanics

Parameter	Values
Body dimensions (L × W × H) without lens adapter	78 mm × 55 mm × 55 mm
Lens mount	C-Mount, F-Mount, M42-Mount available
Mass, without adapter	300 g

Table 12: CL-008 SWIR TEC1 - Mechanics specifications (sheet 1 of 2)

Parameter	Values
Mass, with C-Mount adapter	320 g
Mass, with F-Mount adapter	370 g
Mass, with M42-Mount adapter	340 g

Table 12: CL-008 SWIR TEC1 - Mechanics specifications (sheet 2 of 2)

Operating conditions

Parameter	Values
Operating temperature	-20 °C to +55 °C (case)
Storage temperature	-30 °C to +70 °C (ambient)
Temperature setpoints [2]	+25 °C (default and calibrated) +20 °C, +35 °C, +50 °C (other setpoints) or user-configurable
Relative humidity	10 % to 95 %, non-condensing
Power requirements (DC)	10.8 V to 30.0 V
Max. power consumption	10 W (@ 12 VDC)
Typical power consumption without cooling	4.5 W (@ 12 VDC)
[2] Even though the first temperature setpoint is pre-configured to +20 °C, it is possible to set it to a lower temperature. However, if the sensor temperature is lower than the ambient temperature, especially in humid environments, condensation may occur.	

Table 13: CL-008 SWIR TEC1 - Operating conditions

Absolute quantum efficiency

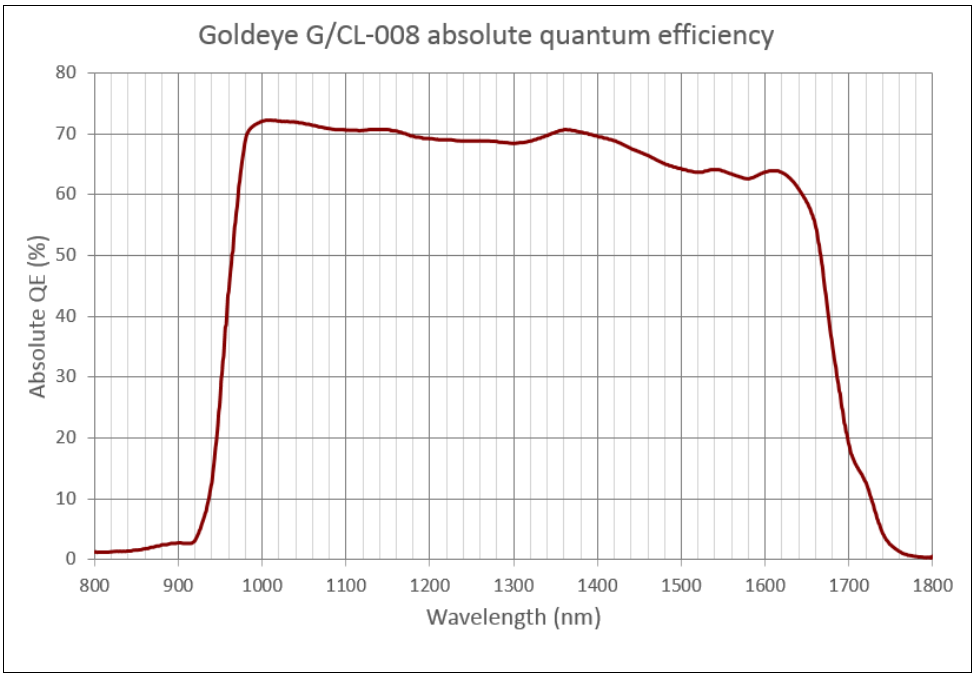

Figure 9: CL-008 SWIR TEC1 - Absolute quantum efficiency

Resolution and ROI frame rates

The maximum frame rate achievable with Goldeye CL-008 models (in frames per second — fps) is determined by the ROI size. It can be calculated using the following formulas.

$$\text{SensorFrameRate} = \frac{10,000,000}{\left[(V+2)\times\left(\frac{H}{4}+32\right)\right]+171}$$

H	ROI: horizontal resolution (width), the formula is valid if H ≥ 128. For H always use the value rounded up to the next multiple of 8.
V	ROI: vertical resolution (height), the formula is valid if V ≥ 8. For V always use the value rounded up to the next multiple of 2.

Formula 1: Maximum frame rate possible with CL-008 models (sheet 1 of 2)

When using the formula, please consider the following:

- Round the denominator down to the next full µs.
- Minimum ROI width is 8 pixels, minimum ROI height is 4 pixels.
- The formula generally outputs very exact values, however when the ROI approaches its minimum size, the accuracy decreases by some degree.
- Computational limitations of the host and image capture software may prevent the camera from achieving maximum frame rates.

$$\text{CameraLinkFrameRate} = \frac{\text{ClFrequency}}{\left[\max((3 \times H + 32), A) + \left(\frac{H}{\text{Taps}} + B\right)(V - 1) + \left(\frac{H}{\text{Taps}}\right) + C + D\right]}$$

A	ClMinFValToLValDelay)
B	ClLValToLValDelay
C	ClLValToFValDelay
D	ClMinFValToFValDelay

$$\text{FrameRate} = \min(\text{SensorFrameRate}, \text{CameraLinkFrameRate})$$

Formula 1: Maximum frame rate possible with CL-008 models (sheet 2 of 2)

Examples for maximum frame rates possible with Goldeye CL-008 models, using a number of common resolutions, are listed in the following table.

Resolution		**25 MHz**		**40 MHz**	
Width	**Height**	**Mono 8/12, 2 Taps**	**Mono 14, 1 Tap**	**Mono 8/12, 2 Taps**	**Mono 14, 1 Tap**
320	256	344	274	344	344
320	240	366	292	366	366
160	120	1117	1059	1117	1117
128	32	4273	4273	4273	4273
128	8	12345	12345	12345	12345

Table 14: CL-008 SWIR TEC1 - Image resolutions and resulting maximum achievable frame rates

Dimensions

Find the dimensions for all Goldeye CL-008 TEC1 models in the drawings linked in the following table.

Model	Dimensions
4168080 CL-008 TEC1 C-Mount	See Goldeye CL, dimensions with C-Mount lens adapter on page 121
4168081 CL-008 TEC1 F-Mount	See Goldeye CL, dimensions with F-Mount lens adapter on page 122
4168083 CL-008 TEC1 M42-Mount	See Goldeye CL, dimensions with M42-Mount lens adapter on page 123

Table 15: CL-008 SWIR TEC1 - Dimensions

Goldeye CL-008 SWIR Cool TEC1

Imaging and performance

Parameter	Values
Sensor	InGaAs, progressive scan, electronic full frame shutter
Sensor type	Focal plane array (FPA)
Spectral range	900 nm to 1700 nm
Resolution	320 (H) × 256 (V)
Pixel size	30 µm × 30 µm
Effective chip size	9.6 mm × 7.68 mm
Dark current (@ +5 °C FPA temperature)	160 ke^-/s
Temporal dark noise (Gain0)	420 e^-
Temporal dark noise (Gain1)	170 e^-
Saturation capacity (Gain0)	2.5 Me^-
Saturation capacity (Gain1)	170 ke^-
Dynamic range (Gain0)	75 dB
Dynamic range (Gain1)	60 dB
Pixel operability	>99.5 %
Maximum frame rate at full resolution	344 fps
Exposure time	6 µs to 1250 ms [1]
Temperature control	Single-stage thermo-electric cooling and heating (TEC1)
Analog gain levels	Gain0, Gain1
Gain factor	15
A/D converter	14-bit
Image buffer size	256 MB
Stream hold capacity	1524 frames at full resolution

[1] Maximum exposure value given is valid for Gain0 and sensor temperature of +5°C. Even longer exposures can be set, but the image quality may deteriorate.

Table 16: CL-008 SWIR Cool TEC1 - Image and performance specifications

Output

Parameter	Values
Digital interface	Camera Link Base, up to 2 taps, 40 MHz, SDR-26 connector, Serial Control Channel
Bit depth	8-, 12-, 14-bit
Pixel formats	Tap geometry 1X 1Y: Mono 8, Mono 12, Mono 14 Tap geometry 1X2 1Y: Mono 8, Mono 12

Table 17: CL-008 SWIR Cool TEC1 - Output specifications

General purpose input and output

Parameter	Values
Opto-isolated I/Os	1 input, 2 outputs
RS232	up to 115,200 bits/second, 8N1 (adjustable)
LVTTL I/Os	1 input, 1 output
LVDS inputs	CC1- CC4

Table 18: CL-008 SWIR Cool TEC1 - General purpose input and output specifications

Mechanics

Parameter	Values
Body dimensions (L × W × H) without lens adapter	90 mm × 80 mm × 80 mm
Lens mount	C-Mount available, F-Mount and M42-Mount available on request
Mass, without adapter	740 g
Mass, with C-Mount adapter	760 g
Mass, with F-Mount adapter	820 g
Mass, with M42-Mount adapter	780 g

Table 19: CL-008 SWIR Cool TEC1 - Mechanics specifications

Operating conditions

Parameter	Values
Operating temperature	-20 °C to +55 °C (case)
Storage temperature	-30 °C to +70 °C (ambient)
Sensor cooling temperature, setpoints	+5 °C (default and calibrated) -5 °C, +10 °C, +20 °C (other setpoints) or user-configurable
Relative humidity	10 % to 95 %, non-condensing
Power requirements (DC)	10.8 V to 30.0 V
Max. power consumption	10.5 W (@ 12 VDC)
Typical power consumption without cooling	5.0 W (@ 12 VDC)

Table 20: CL-008 SWIR Cool TEC1 - Operating conditions

Absolute quantum efficiency

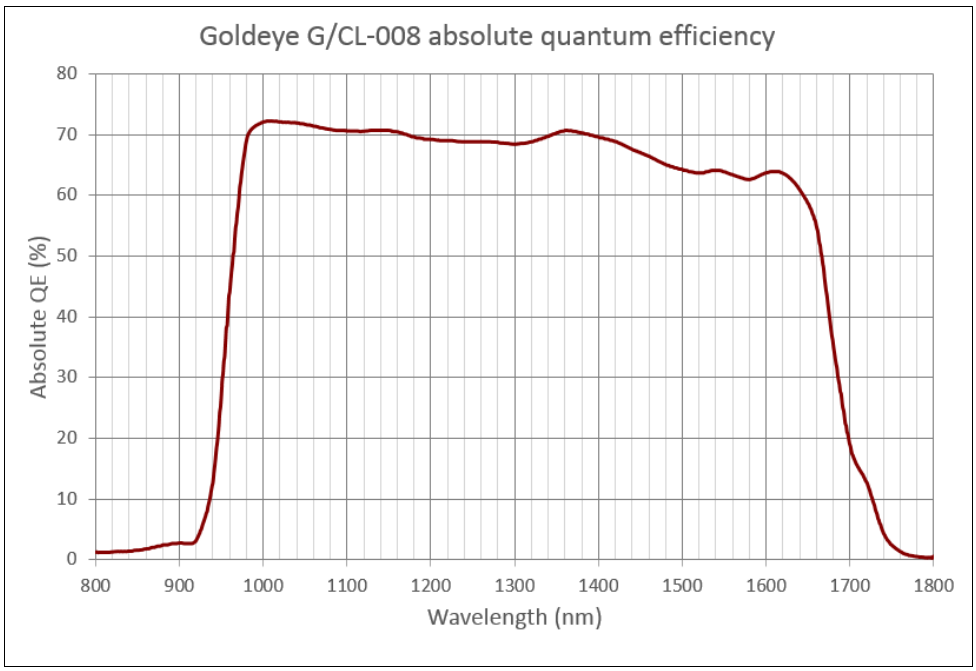

Figure 10: CL-008 SWIR Cool TEC1 - Absolute quantum efficiency

Resolution and ROI frame rates

The maximum frame rate achievable with Goldeye CL-008 models (in frames per second — fps) is determined by the ROI size. It can be calculated using the following formulas.

$$\text{SensorFrameRate} = \frac{10,000,000}{\left[(V+2)\times\left(\frac{H}{4}+32\right)\right]+171}$$

H	ROI: horizontal resolution (width), the formula is valid if H ≥ 128. For H always use the value rounded up to the next multiple of 8.
V	ROI: vertical resolution (height), the formula is valid if V ≥ 8. For V always use the value rounded up to the next multiple of 2.

When using the formula, please consider the following:

- Round the denominator down to the next full µs.
- Minimum ROI width is 8 pixels, minimum ROI height is 4 pixels.
- The formula generally outputs very exact values, however when the ROI approaches its minimum size, the accuracy decreases by some degree.
- Computational limitations of the host and image capture software may prevent the camera from achieving maximum frame rates.

$$\text{CameraLinkFrameRate} = \frac{\text{ClFrequency}}{\left[\max((3\times H+32),A)+\left(\frac{H}{\text{Taps}}+B\right)(V-1)+\left(\frac{H}{\text{Taps}}\right)+C+D\right]}$$

A	ClMinFValToLValDelay)
B	ClLValToLValDelay
C	ClLValToFValDelay
D	ClMinFValToFValDelay

$$\text{FrameRate} = \min(\text{SensorFrameRate},\text{CameraLinkFrameRate})$$

Formula 2: Maximum frame rate possible with CL-008 models

Examples for maximum frame rates possible with Goldeye CL-008 models, using a number of common resolutions, are listed in the following table.

Resolution		25 MHz		40 MHz	
Width	**Height**	**Mono 8/12, 2 Taps**	**Mono 14, 1 Tap**	**Mono 8/12, 2 Taps**	**Mono 14, 1 Tap**
320	256	344	274	344	344
320	240	366	292	366	366
160	120	1117	1059	1117	1117
128	32	4273	4273	4273	4273
128	8	12345	12345	12345	12345

Table 21: CL-008 SWIR Cool TEC1 - Image resolutions and maximum achievable frame rates

Dimensions

Find the dimensions for the Goldeye CL-008 Cool TEC1 C-Mount in the drawing linked in the following table.

Model	Dimensions
4168580 CL-008 TEC1 C-Mount	See Goldeye CL, Cool model, dimensions with C-Mount lens adapter on page 124
CL-008 TEC1 F-Mount	Models with F-Mount adapter are available on request.
CL-008 TEC1 M42-Mount	Models with M42-Mount adapter are available on request.

Table 22: CL-008 SWIR Cool TEC1 - Dimensions

Goldeye CL-032 SWIR TEC1

Imaging and performance

Parameter	Values
Sensor	InGaAs, progressive scan, electronic full frame shutter
Sensor type	Focal plane array (FPA)
Spectral range	900 nm to 1700 nm
Resolution	636 (H) × 508 (V)
Pixel size	25 µm × 25 µm
Effective chip size	15.9 mm × 12.7 mm
Dark current (@ +20 °C FPA temperature)	380 ke^-/s
Temporal dark noise (Gain0)	400 e^-
Temporal dark noise (Gain1)	170 e^-
Saturation capacity (Gain0)	1.9 Me^-
Saturation capacity (Gain1)	39 ke^-
Dynamic range (Gain0)	73 dB
Dynamic range (Gain1)	47 dB
Pixel operability	>99.5 %
Exposure time	6 µs to 200 ms [1]
Maximum frame rate at full resolution	100 fps
Temperature control	Single-stage thermo-electric cooling (TEC1)
Analog gain levels	Gain0, Gain1
A/D converter	14-bit
Gain factor	50
Image buffer size	256 MB
Stream hold capacity	397 frames at full resolution

[1] Maximum exposure value given is valid for Gain0 and sensor temperature of +25°C. Even longer exposures can be set, but the image quality may deteriorate.

Table 23: CL-032 SWIR TEC1 - Image and performance specifications

Output

Parameter	Values
Digital interface	Camera Link Base, up to 2 taps, 40 MHz, SDR-26 connector, Serial Control Channel
Bit depth	8-, 12-, 14-bit
Pixel formats	Tap geometry 1X 1Y: Mono 8, Mono 12, Mono 14 Tap geometry 1X2 1Y: Mono 8, Mono 12

Table 24: CL-032 SWIR TEC1 - Output specifications

General purpose input and output

Parameter	Values
Opto-isolated I/Os	1 input, 2 outputs
RS232	up to 115,200 bits/second, 8N1 (adjustable)
LVTTL I/Os	1 input, 1 output
LVDS inputs	CC1- CC4

Table 25: CL-032 SWIR TEC1 - General purpose input and output specifications

Mechanics

Parameter	Values
Body dimensions (L × W × H) without lens adapter	78 mm × 55 mm × 55 mm
Lens mount	C-Mount, F-Mount, M42-Mount available
Mass, body only, without adapter	320 g
Mass, with C-Mount adapter	340 g
Mass, with F-Mount adapter	400 g
Mass, with M42-Mount adapter	360 g

Table 26: CL-032 SWIR TEC1 - Mechanics specifications

Operating conditions

Parameter	Values
Operating temperature	-20 °C to +55 °C (case)
Storage temperature	-30 °C to +70 °C (ambient)
Sensor cooling temperature, setpoints	+20 °C (default and calibrated) +5 °C, +35 °C, +50 °C (other setpoints) or user-configurable
Relative humidity	10 % to 95 %, non-condensing
Power requirements (DC)	10.8 V to 30.0 V
Max. power consumption	10 W (@ 12 VDC)
Typical power consumption without cooling	4.5 W (@ 12 VDC)

Table 27: CL-032 SWIR TEC1 - Operating conditions

Absolute quantum efficiency

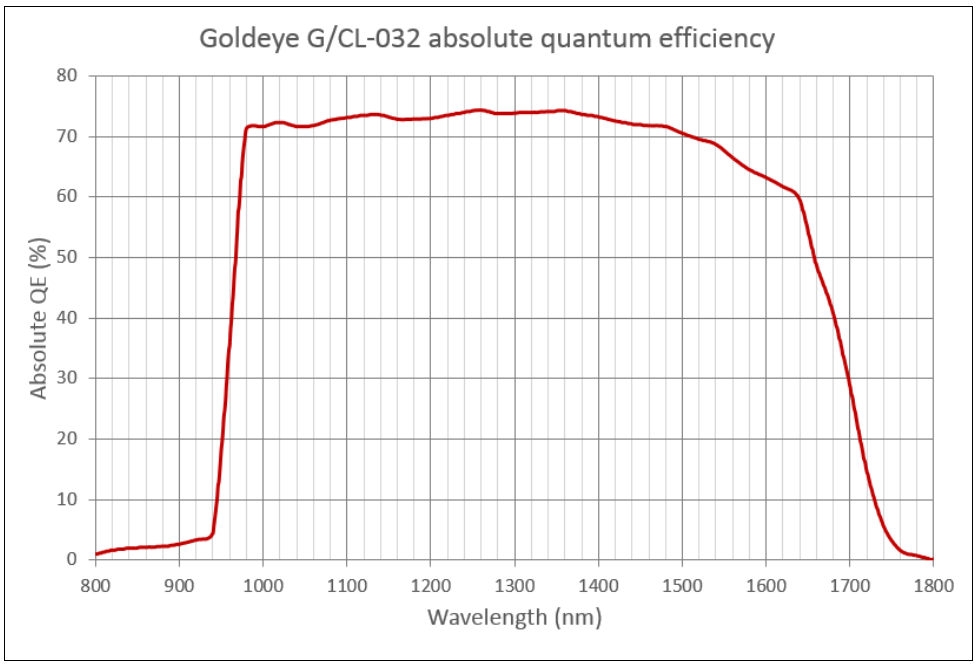

Figure 11: CL-032 SWIR TEC1 - Absolute quantum efficiency

Resolution and ROI frame rates

The maximum frame rate achievable with Goldeye CL-032 models (in frames per second — fps) is determined by the ROI size. Calculate the maximum frame rate using the following formula.

$$\text{SensorFrameRate} = \frac{10,000,000}{\left[(V+4)\times\left(\frac{H}{4}+32\right)\right]+131}$$

H	ROI: horizontal resolution (width). The formula is valid if H ≥ 128. For H always use the value rounded up to the next multiple of 16.
V	ROI: vertical resolution (height). The formula is valid if V ≥ 8. For V always use the value rounded up to the next multiple of 4.

When using the formula, please consider the following:

- Round the denominator down to the next full µs.
- Minimum ROI width is 8 pixels, minimum ROI height is 4 pixels.
- The formula generally outputs very exact values, however when the ROI approaches its minimum size, the accuracy decreases by some degree.
- Computational limitations of the host and image capture software may prevent the camera from achieving maximum frame rates.

$$\text{CameraLinkFrameRate} = \frac{\text{ClFrequency}}{\left[\max((3\times H+32),A)+\left(\frac{H}{\text{Taps}}+B\right)(V-1)+\left(\frac{H}{\text{Taps}}\right)+C+D\right]}$$

$$\text{FrameRate} = \min(\text{SensorFrameRate},\text{CameraLinkFrameRate})$$

A	ClMinFValToLValDelay)
B	ClLValToLValDelay
C	ClLValToFValDelay
D	ClMinFValToFValDelay

Formula 3: Maximum frame rate possible with CL-032 models

Examples for maximum frame rates possible with Goldeye CL-032 models, using a number of common resolutions, are listed in the following table.

Resolution		Mono 8, Mono 12 (2 Taps)		Mono 14 (1Tap)	
Width	**Height**	**25 MHz**	**40 MHz**	**25 MHZ**	**40 MHz**
636	508	100	100	73	100
636	480	107	107	77	107
320	240	351	351	292	351
160	120	1047	1047	1047	1047
128	32	3507	3507	3507	3507
128	8	8264	8264	8264	8264

Table 28: CL-032 SWIR TEC1 - Image resolutions and resulting maximum achievable frame rates

Dimensions

Find the dimensions for all Goldeye CL-032 TEC1 models in the drawings linked in the following table.

Model	Dimensions
4168000 CL-032 TEC1 C-Mount	See Goldeye CL, dimensions with C-Mount lens adapter on page 121
4168001 CL-032 TEC1 F-Mount	See Goldeye CL, dimensions with F-Mount lens adapter on page 122
4168003 CL-032 TEC1 M42-Mount	See Goldeye CL, dimensions with M42-Mount lens adapter on page 123

Table 29: CL-032 SWIR TEC1 - Dimensions

Goldeye CL-032 SWIR Cool TEC2

Imaging and performance

Parameter	Values
Sensor	InGaAs, progressive scan, electronic full frame shutter
Sensor type	Focal plane array (FPA)
Spectral range	900 nm to 1700 nm
Resolution	636 (H) × 508 (V)
Pixel size	25 µm × 25 µm
Effective chip size	15.9 mm × 12.7 mm
Dark current (@-20 °C FPA temperature)	30 ke^-/s
Temporal dark noise (Gain0)	400 e^-
Temporal dark noise (Gain1)	170 e^-
Saturation capacity (Gain0)	1.9 Me^-
Saturation capacity (Gain1)	39 ke^-
Dynamic range (Gain0)	73 dB
Dynamic range (Gain1)	47 dB
Pixel operability	>99.5 %
Exposure time	6 µs to 1250 ms [1]
Maximum frame rate at full resolution	100 fps
Temperature control	Dual-stage thermo-electric cooling (TEC2)
Analog gain levels	Gain0, Gain1
A/D converter	14-bit
Gain factor	50
Image buffer size	256 MB
Stream hold capacity	397 frames at full resolution

[1] Maximum exposure value given is valid for Gain0 and sensor temperature of -20°C. Even longer exposures can be set, but the image quality may deteriorate.

Table 30: CL-032 SWIR Cool TEC2 - Image and performance specifications

Output

Parameter	Values
Digital interface	Camera Link Base, up to 2 taps, 40 MHz, SDR-26 connector, Serial Control Channel
Bit depth	8-, 12-, 14-bit
Pixel formats	Tap geometry 1X 1Y: Mono 8, Mono 12, Mono 14 Tap geometry 1X2 1Y: Mono 8, Mono 12

Table 31: CL-032 SWIR Cool TEC2 - Output specifications

General purpose input and output

Parameter	Values
Opto-isolated I/Os	1 input, 2 outputs
RS232	up to 115,200 bits/second, 8N1 (adjustable)
LVTTL I/Os	1 input, 1 output
LVDS inputs	CC1- CC4

Table 32: CL-032 SWIR Cool TEC2 - General purpose input and output specifications

Mechanics

Parameter	Values
Body dimensions (L × W × H) without lens adapter	90 mm × 80 mm × 80 mm
Lens mount	C-Mount available, F-Mount and M42-Mount available on request
Mass, body only, without adapter	760 g
Mass, with C-Mount adapter	780 g
Mass, with F-Mount adapter	840 g
Mass, with M42-Mount adapter	800 g

Table 33: CL-032 SWIR Cool TEC2 - Mechanics specifications

Operating conditions

Parameter	Values
Operating temperature	-20 °C to +55 °C (case)
Storage temperature	-30 °C to +70 °C (ambient)
Sensor cooling temperature, setpoints	-25 °C (default and calibrated) -5 °C, +10 °C (other setpoints) or user-configurable
Relative humidity	10 % to 95 %, non-condensing
Power requirements (DC)	10.8 V to 10.8 VDC
Max. power consumption	19 W (@ 12 VDC)
Typical power consumption without cooling	5.5 W (@ 12 VDC)

Table 34: CL-032 SWIR Cool TEC2 - Operating conditions

Absolute quantum efficiency

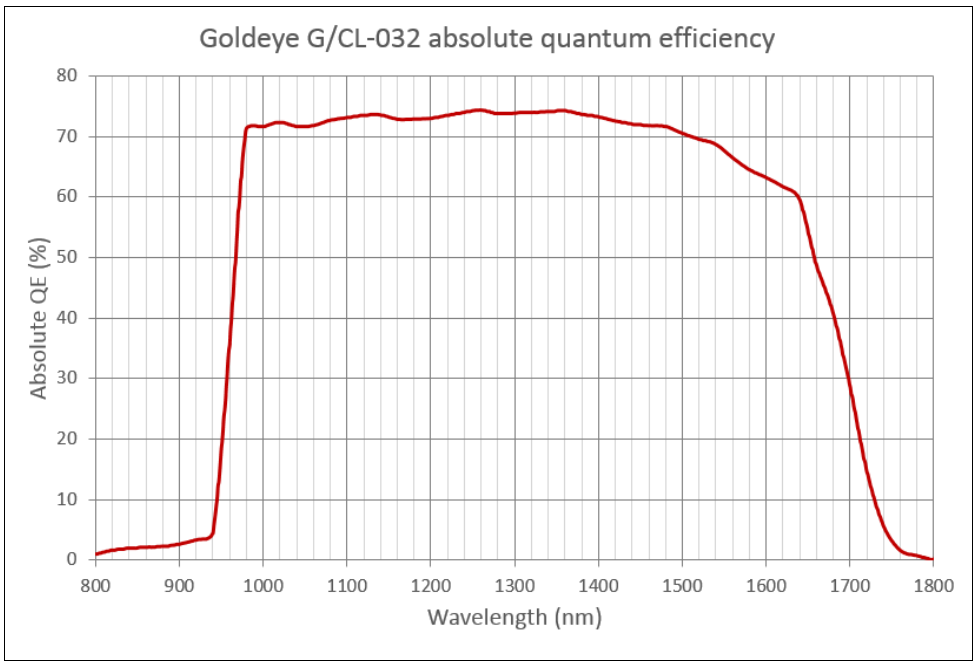

Figure 12: CL-032 SWIR Cool TEC2 - Absolute quantum efficiency

Resolution and ROI frame rates

The maximum frame rate achievable with Goldeye CL-032 models (in frames per second — fps) is determined by the ROI size. Calculate the maximum frame rate using the following formula.

$$\text{SensorFrameRate} = \frac{10,000,000}{\left[(V+4)\times\left(\frac{H}{4}+32\right)\right]+131}$$

H	ROI: horizontal resolution (width). The formula is valid if H ≥ 128. For H always use the value rounded up to the next multiple of 16.
V	ROI: vertical resolution (height). The formula is valid if V ≥ 8. For V always use the value rounded up to the next multiple of 4.

When using the formula, please consider the following:

- Round the denominator down to the next full µs.
- Minimum ROI width is 8 pixels, minimum ROI height is 4 pixels.
- The formula generally outputs very exact values, however when the ROI approaches its minimum size, the accuracy decreases by some degree.
- Computational limitations of the host and image capture software may prevent the camera from achieving maximum frame rates.

$$\text{CameraLinkFrameRate} = \frac{\text{ClFrequency}}{\left[\max((3\times H+32),A)+\left(\frac{H}{\text{Taps}}+B\right)(V-1)+\left(\frac{H}{\text{Taps}}\right)+C+D\right]}$$

$$\text{FrameRate} = \min(\text{SensorFrameRate},\text{CameraLinkFrameRate})$$

A	ClMinFValToLValDelay)
B	ClLValToLValDelay
C	ClLValToFValDelay
D	ClMinFValToFValDelay

Formula 4: Maximum frame rate possible with CL-032 models

Examples for maximum frame rates possible with Goldeye CL-032 models, using a number of common resolutions, are listed in the following table.

Resolution			
Width	**Height**	**Remarks**	**Frame rate max. [fps]**
636	508	Sensor full resolution	100
636	480	Approx. matches VGA format	107
320	240	Matches QVGA format	351
160	120	Matches 1/4 QVGA format	1047
≤ 128	≤ 8	For all resolutions smaller than this, the frame rate remains the same.	11123

Table 35: CL-032 SWIR Cool TEC2: Image resolutions and resulting maximum frame rates

Dimensions

Find the dimensions for the Goldeye CL-032 Cool TEC2 C-Mount in the drawing linked in the following table.

Model	Dimensions
4168520 CL-032 Cool TEC1 C-Mount	See Goldeye CL, Cool model, dimensions with C-Mount lens adapter on page 124
CL-032 TEC1 F-Mount	Models with F-Mount adapter are available on request.
CL-032 TEC1 M42-Mount	Models with M42-Mount adapter are available on request.

Table 36: CL-032 SWIR Cool TEC2 - Dimensions

Goldeye CL-033 SWIR TEC1

Imaging and performance

Parameter	Values
Sensor	InGaAs, progressive scan, electronic full frame shutter
Sensor type	Focal plane array (FPA)
Spectral range	900 nm to 1700 nm
Resolution	640 (H) × 512 (V)
Pixel size	15 µm × 15 µm
Effective chip size	9.6 mm × 7.68 mm
Dark current	110 ke^-/s [1]
Temporal dark noise (Gain0)	390 e^- [1, 2]
Temporal dark noise (Gain1)	53 e^- [1, 2]
Temporal dark noise (Gain2)	32 e^- [1, 2]
Saturation capacity (Gain0)	1.2 Me^- [1, 2]
Saturation capacity (Gain1)	84.8 ke^- [1, 2]
Saturation capacity (Gain2)	25 ke^- [1, 2]
Dynamic range (Gain0)	69 dB [1, 2]
Dynamic range (Gain1)	64 dB [1, 2]
Dynamic range (Gain2)	59 dB [1, 2]
Pixel operability	>99.5 %
Maximum frame rate at full resolution	301 fps (8-bit and 12-bit pixel format)
Exposure time	1 µs to 200 ms [3]
Temperature control	Single-stage thermo-electric cooling (TEC1)
Analog gain levels	Gain0, Gain1, Gain2

[1] Typical values that are determined similar to EMVA 1288 under 1200 nm LED illumination. Given values are mean values of multiple different measurements at +20 °C FPA temperature, if not stated otherwise.

[2] Measured with CDS delay of 12 µs.

[3] Maximum exposure value given is valid for Gain0 and sensor temperature of +25°C. Even longer exposures can be set, but the image quality may deteriorate.

Table 37: CL-033 SWIR TEC1 - Image and performance specifications (sheet 1 of 2)

Parameter	Values
Gain factor (Gain 1)	14
Gain factor (Gain 2)	45
A/D converter	14-bit
Image buffer size	256 MB
Stream hold capacity	392 frames at full resolution

[1] Typical values that are determined similar to EMVA 1288 under 1200 nm LED illumination. Given values are mean values of multiple different measurements at +20 °C FPA temperature, if not stated otherwise.

[2] Measured with CDS delay of 12 µs.

[3] Maximum exposure value given is valid for Gain0 and sensor temperature of +25°C. Even longer exposures can be set, but the image quality may deteriorate.

Table 37: CL-033 SWIR TEC1 - Image and performance specifications (sheet 2 of 2)

Output

Parameter	Values
Digital interface	Camera Link Base, up to 2 taps, 85 MHz, SDR-26 connector, Serial Control Channel
Bit depth	8-, 12-, 14-bit
Pixel formats	Tap geometry 1X 1Y: Mono 8, Mono 12, Mono 14 Tap geometry 1X2 1Y: Mono 8, Mono 12

Table 38: CL-033 SWIR TEC1 - Output specifications

General purpose input and output

Parameter	Values
Opto-isolated I/Os	1 input, 2 outputs
RS232	up to 115,200 bits/second, 8N1 (adjustable)
LVTTL I/Os	1 input, 1 output
LVDS inputs	CC1- CC4

Table 39: CL-033 SWIR TEC1 - General purpose input and output specifications

Mechanics

Parameter	Values
Body dimensions (L × W × H) without lens adapter	78 mm × 55 mm × 55 mm
Lens mount	C-Mount, F-Mount, M42-Mount available
Mass, body only, without adapter	330 g
Mass, with C-Mount adapter	350 g
Mass, with F-Mount adapter	400 g
Mass, with M42-Mount adapter	370 g

Table 40: CL-033 SWIR TEC1 - Mechanics specifications

Operating conditions

Parameter	Values
Operating temperature	-20 °C to +55 °C (case)
Storage temperature	-30 °C to +70 °C (ambient)
Sensor cooling temperature, setpoints	+20 °C (default and calibrated) +5 °C, +35 °C, +50 °C (other setpoints) or user-configurable
Relative humidity	10 % to 95 %, non-condensing
Power requirements (DC)	10.8 V to 30.0 V
Max. power consumption	11.8 W (@ 12 VDC)
Typical power consumption without cooling	6.3 W (@ 12 VDC)

Table 41: CL-033 SWIR TEC1 - Operating conditions

Absolute quantum efficiency

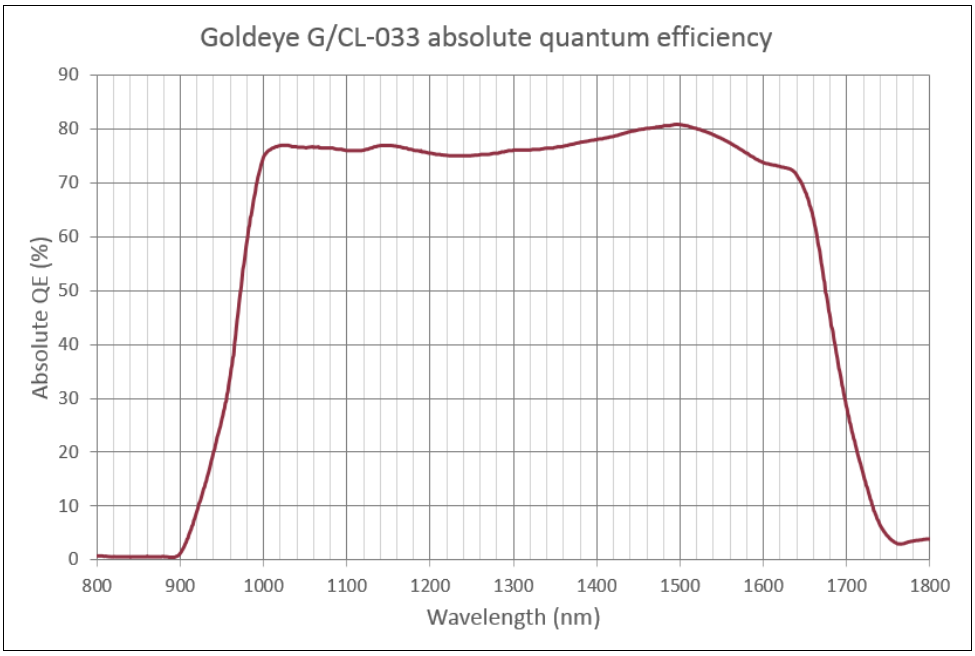

Figure 13: CL-033 SWIR TEC1 - Absolute quantum efficiency

Resolution and ROI frame rate

The maximum frame rate achievable with Goldeye CL-033 models (in frames per second — fps) is determined by the ROI size. Calculate the maximum frame rate using the following formula.

$$\text{SensorFrameRate} = \frac{18,000,000}{\left[(V+1)\times\left(\frac{H}{8}+36\right)\right]+254}$$

H	ROI: horizontal resolution (width). The formula is valid if H ≥ 128. For H always use the value rounded up to the next multiple of 32.
V	ROI: vertical resolution (height). The formula is valid if V ≥ 8. For V always use the value rounded up to the next multiple of 4.

Formula 5: Maximum frame rate possible with CL-033 models (sheet 1 of 2)

When using the formula, please consider the following:

- Round the denominator up or down to the next full µs.
- Minimum ROI width is 8 pixels, minimum ROI height is 4 pixels.
- The formula generally outputs very exact values, however when the ROI approaches its minimum size, the accuracy decreases by some degree.
- Computational limitations of the host and image capture software may prevent the camera from achieving maximum frame rates.

$$\text{CameraLinkFrameRate} = \frac{\text{ClFrequency}}{\left[\max((3 \times H + 32), A) + \left(\frac{H}{\text{Taps}} + B\right)(V - 1) + \left(\frac{H}{\text{Taps}}\right) + C + D\right]}$$

$$\text{FrameRate} = \min(\text{SensorFrameRate}, \text{CameraLinkFrameRate})$$

A	ClMinFValToLValDelay)
B	ClLValToLValDelay
C	ClLValToFValDelay
D	ClMinFValToFValDelay

Formula 5: Maximum frame rate possible with CL-033 models (sheet 2 of 2)

Examples for maximum frame rates possible with the Goldeye CL-033, using a number of common resolutions, are listed in the following table.

Resolution		Mono 8, Mono 12 (2 Taps)			Mono 14 (1Tap)		
Width	**Height**	**25 MHz**	**55 MHz**	**85 MHz**	**25 MHz**	**55 MHz**	**85 MHz**
640	512	125	276	301	68	151	234
640	480	134	295	321	73	161	250
320	256	428	251	909	251	553	855
320	240	456	268	968	268	590	912
160	120	1404	912	2557	912	2004	2557
128	32	5524	3802	9174	3802	8333	9174
128	8	17241	12658	25000	12658	25000	25000

Table 42: CL-033 SWIR TEC1 - maximum achievable frame rates

Dimensions

Find the dimensions for all Goldeye CL-033 TEC1 models in the drawings linked in the following table.

Model	Dimensions
4168030 CL-033 TEC1 C-Mount	See Goldeye CL, dimensions with C-Mount lens adapter on page 121
4168031 CL-033 TEC1 F-Mount	See Goldeye CL, dimensions with F-Mount lens adapter on page 122
4168033 CL-033 TEC1 M42-Mount	See Goldeye CL, dimensions with M42-Mount lens adapter on page 123

Table 43: CL-033 SWIR TEC1 - Dimensions

Goldeye CL-033 SWIR TECless

Imaging and performance

Parameter	Values
Sensor	InGaAs, progressive scan, electronic full frame shutter
Sensor type	Focal plane array (FPA)
Spectral range	900 nm to 1700 nm
Resolution	640 (H) × 512 (V)
Pixel size	15 µm × 15 µm
Effective chip size	9.6 mm × 7.68 mm
Dark current (@ +45 °C FPA temperature)	430 ke^-/s [1]
Temporal dark noise (Gain0)	390 e^- [1, 2]
Temporal dark noise (Gain1)	53 e^- [1, 2]
Temporal dark noise (Gain2)	32 e^- [1, 2]
Saturation capacity (Gain0)	1.2 Me^- [1, 2]
Saturation capacity (Gain1)	84.8 ke^- [1, 2]
Saturation capacity (Gain2)	25 ke^- [1, 2]
Dynamic range (Gain0)	69 dB [1, 2]
Dynamic range (Gain1)	64 dB [1, 2]
Dynamic range (Gain2)	59 dB [1, 2]
Pixel operability	>99.5 %
Maximum frame rate at full resolution	301 fps (8-bit and 12-bit pixel format)
Exposure time	1 µs to 200 ms [3]
Temperature control	Without thermo-electric cooling (TECless)

[1] Typical values that are determined similar to EMVA 1288 under 1200 nm LED illumination. Given values are mean values of multiple different measurements at +45 °C FPA temperature, if not stated otherwise.

[2] Measured with CDS delay of 12 µs.

[3] Maximum exposure value given is valid for Gain0 and sensor temperature of +45°C. Even longer exposures can be set, but the image quality may deteriorate.

Table 44: CL-033 SWIR TECless - Image and performance specifications (sheet 1 of 2)

Parameter	Values
Analog gain levels	Gain0, Gain1, Gain2
Gain factor (Gain 1)	14
Gain factor (Gain 2)	45
A/D converter	14-bit
Image buffer size	256 MB
Stream hold capacity	392 frames at full resolution

[1] Typical values that are determined similar to EMVA 1288 under 1200 nm LED illumination. Given values are mean values of multiple different measurements at +45 °C FPA temperature, if not stated otherwise.

[2] Measured with CDS delay of 12 µs.

[3] Maximum exposure value given is valid for Gain0 and sensor temperature of +45°C. Even longer exposures can be set, but the image quality may deteriorate.

Table 44: CL-033 SWIR TECless - Image and performance specifications (sheet 2 of 2)

Output

Parameter	Values
Digital interface	Camera Link Base, up to 2 taps, 85 MHz, SDR-26 connector, Serial Control Channel
Bit depth	8-, 12-, 14-bit
Pixel formats	Tap geometry 1X 1Y: Mono 8, Mono 12, Mono 14 Tap geometry 1X2 1Y: Mono 8, Mono 12

Table 45: CL-033 SWIR TECless - Output specifications

General purpose input and output

Parameter	Values
Opto-isolated I/Os	1 input, 2 outputs
RS232	up to 115,200 bits/second, 8N1 (adjustable)
LVTTL I/Os	1 input, 1 output
LVDS inputs	CC1- CC4

Table 46: CL-033 SWIR TECless - General purpose input and output specifications

Mechanics

Parameter	Values
Body dimensions (L × W × H) without lens adapter	78 mm × 55 mm × 55 mm
Lens mount	C-Mount available, F-Mount and M42-Mount available on request
Mass, body only, without adapter	300 g
Mass, with C-Mount adapter	320 g
Mass, with F-Mount adapter	370 g
Mass, with M42-Mount adapter	340 g

Table 47: CL-033 SWIR TECless - Mechanics specifications

Operating conditions

Parameter	Values
Operating temperature	-20 °C to +55 °C (case)
Storage temperature	-30 °C to +70 °C (ambient)
Sensor cooling temperature, setpoints	(Not applicable to TECless models.)
Relative humidity	10 % to 95 %, non-condensing
Power requirements (DC)	10.8 V to 30.0 V
Max. power consumption	6.0 W (@ 12 VDC)
Typical power consumption	6.0 W (@ 12 VDC)

Table 48: CL-033 SWIR TECless - Operating conditions

Absolute quantum efficiency

Figure 14: CL-033 SWIR TECless - Absolute quantum efficiency

Resolution and ROI frame rate

The maximum frame rate achievable with Goldeye CL-033 models (in frames per second — fps) is determined by the ROI size. Calculate the maximum frame rate using the following formula.

$$\text{SensorFrameRate} = \frac{18,000,000}{\left[(V+1)\times\left(\frac{H}{8}+36\right)\right]+254}$$

H	ROI: horizontal resolution (width). The formula is valid if H ≥ 128. For H always use the value rounded up to the next multiple of 32.
V	ROI: vertical resolution (height). The formula is valid if V ≥ 8. For V always use the value rounded up to the next multiple of 4.

Formula 6: Maximum frame rate possible with CL-033 models (sheet 1 of 2)

When using the formula, please consider the following:

- Round the denominator up or down to the next full µs.
- Minimum ROI width is 8 pixels, minimum ROI height is 4 pixels.
- The formula generally outputs very exact values, however when the ROI approaches its minimum size, the accuracy decreases by some degree.
- Computational limitations of the host and image capture software may prevent the camera from achieving maximum frame rates.

$$\text{CameraLinkFrameRate} = \frac{\text{ClFrequency}}{\left[\max((3 \times H + 32), A) + \left(\frac{H}{Taps} + B\right)(V - 1) + \left(\frac{H}{Taps}\right) + C + D\right]}$$

$$\text{FrameRate} = \min(\text{SensorFrameRate}, \text{CameraLinkFrameRate})$$

A	ClMinFValToLValDelay)
B	ClLValToLValDelay
C	ClLValToFValDelay
D	ClMinFValToFValDelay

Formula 6: Maximum frame rate possible with CL-033 models (sheet 2 of 2)

Examples for maximum frame rates possible with Goldeye CL-033 models, using a number of common resolutions, are listed in the following table.

Resolution		Mono 8, Mono 12 (2 Taps)			Mono 14 (1Tap)		
Width	**Height**	**25 MHz**	**55 MHz**	**85 MHz**	**25 MHz**	**55 MHz**	**85 MHz**
640	512	125	276	301	68	151	234
640	480	134	295	321	73	161	250
320	256	428	251	909	251	553	855
320	240	456	268	968	268	590	912
160	120	1404	912	2557	912	2004	2557
128	32	5524	3802	9174	3802	8333	9174
128	8	17241	12658	25000	12658	25000	25000

Table 49: CL-033 SWIR TECless - maximum achievable frame rates

Dimensions

Find the dimensions for the Goldeye CL-033 TECless C-Mount in the drawings linked in the following table.

Model	Dimensions
4168730 CL-033 TECless C-Mount	See Goldeye CL, dimensions with C-Mount lens adapter on page 121
CL-033 TECless F-Mount	Models with F-Mount adapter are available on request.
CL-033 TECless M42-Mount	Models with M42-Mount adapter are available on request.

Table 50: CL-033 SWIR TECless - Dimensions

Goldeye G-008 SWIR TEC1

Imaging and performance

Parameter	Values
Sensor	InGaAs, progressive scan, electronic full frame shutter
Sensor type	Focal plane array (FPA)
Spectral range	900 nm to 1700 nm
Resolution	320 (H) × 256 (V)
Pixel size	30 µm × 30 µm
Effective chip size	9.6 mm × 7.68 mm
Dark current (@ +25 °C FPA temperature)	280 ke^-/s
Temporal dark noise (Gain0)	420 e^-
Temporal dark noise (Gain1)	170 e^-
Saturation capacity (Gain0)	2.5 Me^-
Saturation capacity (Gain1)	170 ke^-
Dynamic range (Gain0)	75 dB
Dynamic range (Gain1)	60 dB
Pixel operability	>99.5 %
Maximum frame rate at full resolution	344 fps
Exposure time	6 µs to 200 ms [1]
Temperature control	Single-stage thermo-electric cooling and heating (TEC1)
Analog gain levels	Gain0, Gain1
A/D converter	14-bit
Gain factor	15
Image buffer size	256 MB
Stream hold capacity	1524 frames at full resolution

[1] Maximum exposure value given is valid for Gain0 and sensor temperature of +25°C. Even longer exposures can be set, but the image quality may deteriorate.

Table 51: G-008 SWIR TEC1 - Image and performance specifications

Output

Parameter	Values
Digital interface	GigE Vision (based on IEEE 802.3 1000BASE-T)
Bit depth	8-, 12-, 14-bit
Pixel formats	Mono 8, Mono 12, Mono 12Packed, Mono 14

Table 52: G-008 SWIR TEC1 - Output specifications

General purpose input and output

Parameter	Values
Opto-isolated I/Os	1 input, 2 outputs
RS232	up to 115,200 bits/second, 8N1 (adjustable)
LVTTL I/Os	1 input, 1 output

Table 53: G-008 SWIR TEC1 - General purpose input and output specifications

Mechanics

Parameter	Values
Body dimensions (L × W × H) without lens adapter	78 mm × 55 mm × 55 mm
Lens mount	C-Mount, F-Mount, M42-Mount available
Mass, body only, without adapter	320 g
Mass, with C-Mount adapter	340 g
Mass, with F-Mount adapter	390 g
Mass, with M42-Mount adapter	360 g

Table 54: G-008 SWIR TEC1 - Mechanics specifications

Operating conditions

Parameter	Values
Operating temperature	-20 °C to +55 °C (case)
Storage temperature	-30 °C to +70 °C (ambient)
Sensor cooling temperature, setpoints [2]	+20 °C (default and calibrated) +25 °C, +35 °C, +50 °C (other setpoints) or user-configurable
Relative humidity	10 % to 95 %, non-condensing
Power requirements (DC)	10.8 V to 30.0 V or via PoE (IEEE 802.3at Type 1 Class 0)
Max. power consumption	<12.95 W (PoE), 10.8 W (12 VDC)
Typical power consumption without cooling	6.5 W (PoE), 5 W (12 VDC)
[2] Even though the first temperature setpoint is pre-configured to +20 °C, it is possible to set it to a lower temperature. However, if the sensor temperature is lower than the ambient temperature, especially in humid environments, condensation may occur.	

Table 55: G-008 SWIR TEC1 - Operating conditions

Absolute quantum efficiency

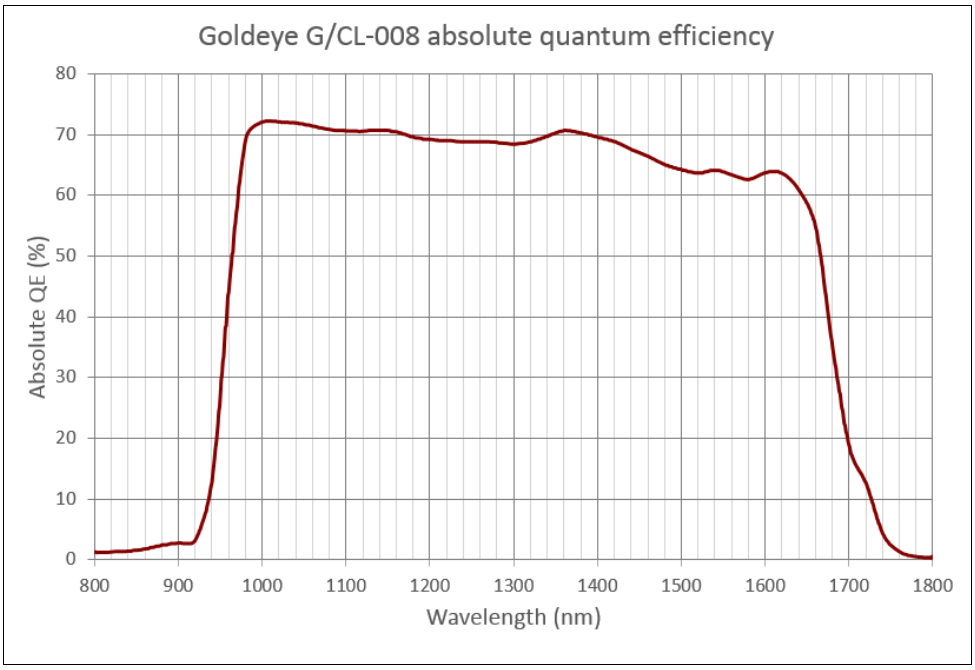

Figure 15: G-008 SWIR TEC1 - Absolute quantum efficiency

Resolution and ROI frame rates

The maximum frame rate achievable with Goldeye G-008 models (in frames per second — fps) is determined by the ROI size. Calculate the maximum frame rate using the following formula.

$$\text{FrameRate} = \frac{10,000,000}{\left[(V+2)\times\left(\frac{H}{4}+32\right)\right]+171}$$

H	ROI: horizontal resolution (width). The formula is valid if H ≥ 128. For H always use the value rounded up to the next multiple of 8.
V	ROI: vertical resolution (height). The formula is valid if V ≥ 8. For V always use the value rounded up to the next multiple of 2.

When using the formula, please consider the following:

- Round the denominator down to the next full µs.
- Minimum ROI width is 8 pixels, minimum ROI height is 4 pixels.
- The formula generally outputs very exact values, however when the ROI approaches its minimum size, the accuracy decreases by some degree.
- Computational limitations of the host and image capture software may prevent the camera from achieving maximum frame rates.

Formula 7: Maximum frame rate possible with G-008 models

Examples for maximum frame rates possible with Goldeye G-008 models, using a number of common resolutions, are listed in the following table.

Resolution			
Width	**Height**	**Remarks**	**Frame rate max. [fps]**
320	256	Sensor full resolution	344
320	240	Matches QVGA format	366
160	120	Matches 1/4 QVGA format	1117
128	32	(None)	4273
≤ 128	≤ 8	For all resolutions smaller than this, the frame rate remains the same.	>=12345

Table 56: G-008 SWIR Cool TEC1 - Image resolutions and resulting maximum frame rates

To achieve the highest possible frame rates for different formats, it may become necessary to change the GigE streaming features, particularly to adjust the GigE packet size.

- Smaller packets may be advantageous if using small ROIs
- Larger packets may be advantageous if using larger ROIs

Dimensions

Find the dimensions for all Goldeye G-008 TEC1 models in the drawings linked in the following table.

Model	Dimensions
4068080 G-008 TEC1 C-Mount	See Goldeye G, dimensions with C-Mount lens adapter on page 125
4068081 G-008 TEC1 F-Mount	See Goldeye G, dimensions with F-Mount lens adapter on page 126
4068083 G-008 TEC1 M42-Mount	See Goldeye G, dimensions with M42-Mount lens adapter on page 127

Table 57: G-008 SWIR TEC1 - Dimensions

Goldeye G-008 SWIR Cool TEC1

Imaging and performance

Parameter	Values
Sensor	InGaAs, progressive scan, electronic full frame shutter
Sensor type	Focal plane array (FPA)
Spectral range	900 nm to 1700 nm
Resolution	320 (H) × 256 (V)
Pixel size	30 µm × 30 µm
Effective chip size	9.6 mm × 7.68 mm
Dark current (@ +5 °C FPA temperature)	160 ke^-/s
Temporal dark noise (Gain0)	420 e^-
Temporal dark noise (Gain1)	170 e^-
Saturation capacity (Gain0)	2.5 Me^-
Saturation capacity (Gain1)	170 ke^-
Dynamic range (Gain0)	75 dB
Dynamic range (Gain1)	60 dB
Pixel operability	>99.5 %
Maximum frame rate at full resolution	344 fps
Exposure time	6 µs to 1250 ms [1]
Temperature control	Single-stage thermo-electric cooling and heating (TEC1)
Analog gain levels	Gain0, Gain1
Gain factor	15
A/D converter	14-bit
Image buffer size	256 MB
Stream hold capacity	1524 frames at full resolution

[1] Maximum exposure value given is valid for Gain0 and sensor temperature of +5°C. Even longer exposures can be set, but the image quality may deteriorate.

Table 58: G-008 SWIR Cool TEC1 - Image and performance specifications

Output

Parameter	Values
Digital interface	GigE Vision (based on IEEE 802.3 1000BASE-T)
Bit depth	8-, 12-, 14-bit
Pixel formats	Mono 8, Mono 12, Mono 12Packed, Mono 14

Table 59: G-008 SWIR Cool TEC1 - Output specifications

General purpose input and output

Parameter	Values
Opto-isolated I/Os	1 input, 2 outputs
RS232	up to 115,200 bits/second, 8N1 (adjustable)
LVTTL I/Os	1 input, 1 output

Table 60: G-008 SWIR Cool TEC1 - General purpose input and output specifications

Mechanics

Parameter	Values
Body dimensions (L × W × H) without lens adapter	90 mm × 80 mm × 80 mm
Lens mount	C-Mount available, F-Mount and M42-Mount available on request
Mass, body only, without adapter	770 g
Mass, with C-Mount adapter	790 g
Mass, with F-Mount adapter	840 g
Mass, with M42-Mount adapter	810 g

Table 61: G-008 SWIR Cool TEC1 - Mechanics specifications

Operating conditions

Parameter	Values
Operating temperature	-20 °C to +55 °C (case)
Storage temperature	-30 °C to +70 °C (ambient)
Sensor cooling temperature, setpoints	+5 °C (default and calibrated) -5 °C, +10 °C, +20 °C (other setpoints) or user-configurable
Relative humidity	10 % to 95 %, non-condensing
Power requirements (DC)	10.8 V to 30.0 V or via PoE (IEEE 802.3at Type 1 Class 0)
Max. power consumption	<12.95 W (PoE), 10.7 W (12 VDC)
Typical power consumption without cooling	6.6 W (PoE), 4.9 W (12 VDC)

Table 62: G-008 SWIR Cool TEC1 - Operating conditions

Absolute quantum efficiency

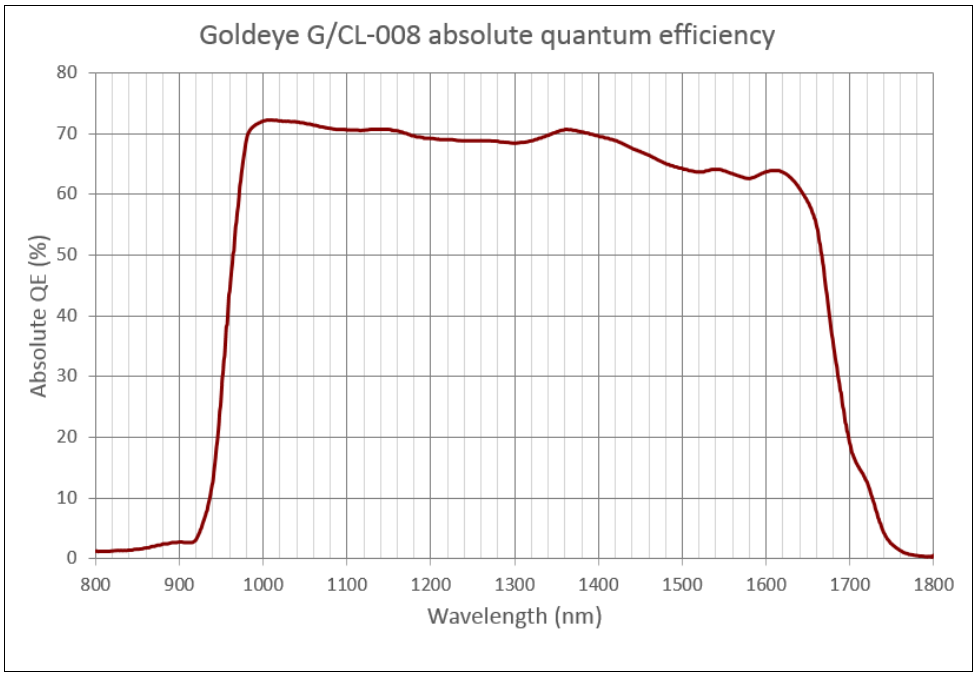

Figure 16: G-008 SWIR Cool TEC1 - Absolute quantum efficiency

Resolution and ROI frame rates

The maximum frame rate achievable with Goldeye G-008 models (in frames per second — fps) is determined by the ROI size. Calculate the maximum frame rate using the following formula.

$$\text{FrameRate} = \frac{10,000,000}{\left[(V+2)\times\left(\frac{H}{4}+32\right)\right]+171}$$

H	ROI: horizontal resolution (width). The formula is valid if H ≥ 128. For H always use the value rounded up to the next multiple of 8.
V	ROI: vertical resolution (height). The formula is valid if V ≥ 8. For V always use the value rounded up to the next multiple of 2.

When using the formula, please consider the following:

- Round the denominator down to the next full µs.
- Minimum ROI width is 8 pixels, minimum ROI height is 4 pixels.
- The formula generally outputs very exact values, however when the ROI approaches its minimum size, the accuracy decreases by some degree.
- Computational limitations of the host and image capture software may prevent the camera from achieving maximum frame rates.

Formula 8: Maximum frame rate possible with G-008 models

Examples for maximum frame rates possible with Goldeye G-008 models, using a number of common resolutions, are listed in the following table.

Resolution			
Width	**Height**	**Format name**	**Frame rate max. [fps]**
320	256	Sensor full resolution	344
320	240	Matches QVGA format	366
160	120	Matches 1/4 QVGA format	1117
128	32	(None)	4273
≤ 128	≤ 8	For all resolutions smaller than this, the frame rate remains the same.	>=12345

Table 63: G-008 SWIR Cool TEC1: Image resolutions and resulting maximum frame rates

To achieve the highest possible frame rates for different formats, it may become necessary to change the GigE streaming features, particularly to adjust the GigE packet size.

- Smaller packets may be advantageous if using small ROIs
- Larger packets may be advantageous if using larger ROIs

Dimensions

Find the dimensions for the Goldeye G-008 Cool TEC1 C-Mount in the drawings linked in the following table.

Model	Dimensions
4068580 G-008 Cool TEC1 C-Mount	See Goldeye G, Cool model, dimensions with C-Mount lens adapter on page 128
G-008 Cool TEC1 F-Mount	Models with F-Mount adapter are available on request.
G-008 Cool TEC1 M42-Mount	Models with M42-Mount adapter are available on request.

Table 64: G-008 SWIR Cool TEC1 - Dimensions

Goldeye G-032 SWIR TEC1

Imaging and performance

Parameter	Values
Sensor	InGaAs, progressive scan, electronic full frame shutter
Sensor type	Focal plane array (FPA)
Spectral range	900 nm to 1700 nm
Resolution	636 (H) × 508 (V)
Pixel size	25 µm × 25 µm
Effective chip size	15.9 mm × 12.7 mm
Dark current (@ +20 °C FPA temperature)	380 ke^-/s
Temporal dark noise (Gain0)	400 e^-
Temporal dark noise (Gain1)	170 e^-
Saturation capacity (Gain0)	1.9 Me^-
Saturation capacity (Gain1)	39 ke^-
Dynamic range (Gain0)	73 dB
Dynamic range (Gain1)	47 dB
Pixel operability	>99.5 %
Exposure time	6 µs to 200 ms [1]
Maximum frame rate at full resolution	100 fps
Temperature control	Single-stage thermo-electric cooling (TEC1)
Analog gain levels	Gain0, Gain1
Gain factor	50
A/D converter	14-bit
Image buffer size	256 MB
Stream hold capacity	397 frames at full resolution

[1] Maximum exposure value given is valid for Gain0 and sensor temperature of +25°C. Even longer exposures can be set, but the image quality may deteriorate.

Table 65: G-032 SWIR TEC1 - Image and performance specifications

Output

Parameter	Values
Digital interface	GigE Vision (based on IEEE 802.3 1000BASE-T)
Bit depth	8-, 12-, 14-bit
Pixel formats	Mono 8, Mono 12, Mono 12Packed, Mono 14

Table 66: G-032 SWIR TEC1 - Output specifications

General purpose input and output

Parameter	Values
Opto-isolated I/Os	1 input, 2 outputs
RS232	up to 115,200 bits/second, 8N1 (adjustable)
LVTTL I/Os	1 input, 1 output

Table 67: G-032 SWIR TEC1 - General purpose input and output specifications

Mechanics

Parameter	Values
Body dimensions (L × W × H) without lens adapter	78 mm × 55 mm × 55 mm
Lens mount	C-Mount, F-Mount, M42-Mount available
Mass, body only, without adapter	350 g
Mass, with C-Mount adapter	370 g
Mass, with F-Mount adapter	420 g
Mass, with M42-Mount adapter	390 g

Table 68: G-032 SWIR TEC1 - Mechanics specifications

Operating conditions

Parameter	Values
Operating temperature	-20 °C to +55 °C (case)
Storage temperature	-30 °C to +70 °C (ambient)
Sensor cooling temperature, setpoints	+20 °C (default and calibrated) +5 °C, +35 °C, +50 °C (other setpoints) or user-configurable
Relative humidity	10 % to 95 %, non-condensing
Power requirements (DC)	10.8 V to 30.0 V or via PoE (IEEE 802.3at Type 1 Class 0)
Max. power consumption	<12.95 W (PoE), 10.8 W (12 VDC)
Typical power consumption without cooling	6.5 W (PoE), 5 W (12 VDC)

Table 69: G-032 SWIR TEC1 - Operating conditions

Absolute quantum efficiency

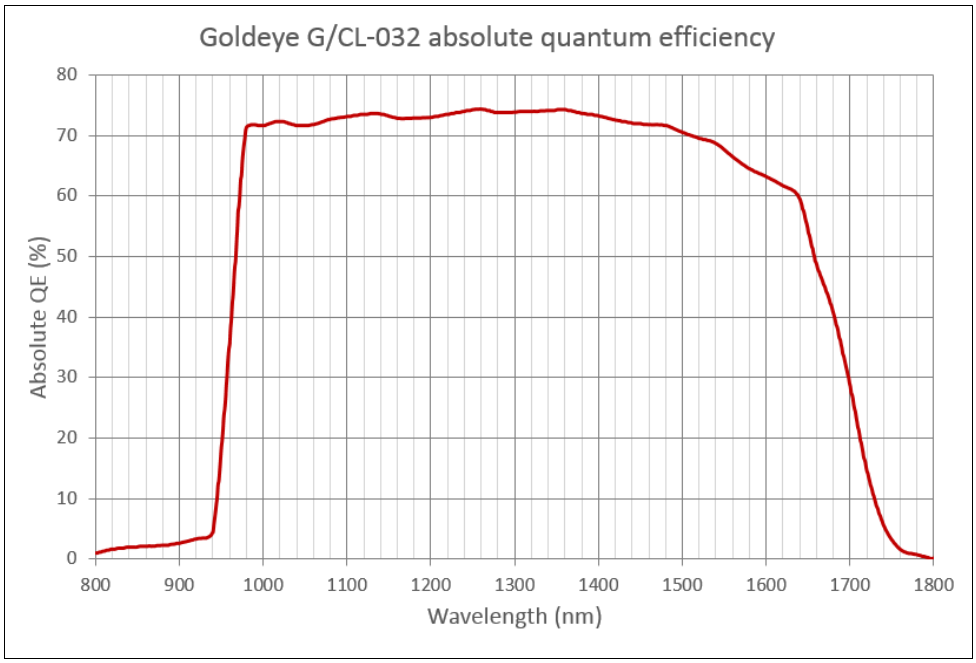

Figure 17: G-032 SWIR TEC1 - Absolute quantum efficiency

Resolution and ROI frame rates

The maximum frame rate achievable with Goldeye G-032 models (in frames per second — fps) is determined by the ROI size. Calculate the maximum frame rate using the following formula.

$$\text{FrameRate} = \frac{10,000,000}{\left[(V+4)\times\left(\frac{H}{4}+32\right)\right]+131}$$

H	ROI: horizontal resolution (width). The formula is valid if H ≥ 128. For H always use the value rounded up to the next multiple of 16.
V	ROI: vertical resolution (height). The formula is valid if V ≥ 8. For V always use the value rounded up to the next multiple of 4.

When using the formula, please consider the following:

- Round the denominator down to the next full µs.
- Minimum ROI width is 8 pixels, minimum ROI height is 4 pixels.
- The formula generally outputs very exact values, however when the ROI approaches its minimum size, the accuracy decreases by some degree.
- Computational limitations of the host and image capture software may prevent the camera from achieving maximum frame rates.

Formula 9: Maximum frame rate possible with G-032 models

Examples for maximum frame rates possible with Goldeye G-032 models, using a number of common resolutions, are listed in the following table.

Resolution			
Width	**Height**	**Format name**	**Frame rate max. [fps]**
636	508	Sensor full resolution	100
636	480	Approx. matches VGA format	107
320	240	Matches QVGA format	351
160	120	Matches 1/4 QVGA format	1047
≤ 128	≤ 8	For all resolutions smaller than this, the frame rate remains the same.	11123

Table 70: G-032 SWIR TEC1: Image resolutions and resulting maximum frame rates

To achieve the highest possible frame rates for different formats, it may become necessary to change the GigE streaming features, particularly to adjust the GigE packet size.

- Smaller packets may be advantageous if using small ROIs
- Larger packets may be advantageous if using larger ROIs

Dimensions

Find the dimensions for all Goldeye G-032 TEC1 models in the drawings linked in the following table.

Model	Dimensions
4068000 G-032 TEC1 C-Mount	See Goldeye G, dimensions with C-Mount lens adapter on page 125
4068001 G-032 TEC1 F-Mount	See Goldeye G, dimensions with F-Mount lens adapter on page 126
4068003 G-032 TEC1 M42-Mount	See Goldeye G, dimensions with M42-Mount lens adapter on page 127

Table 71: G-032 SWIR TEC1 - Dimensions

Goldeye G-032 SWIR Cool TEC2

Imaging and performance

Parameter	Values
Sensor	InGaAs, progressive scan, electronic full frame shutter
Sensor type	Focal plane array (FPA)
Spectral range	900 nm to 1700 nm
Resolution	636 (H) × 508 (V)
Pixel size	25 µm × 25 µm
Effective chip size	15.9 mm × 12.7 mm
Dark current (@ -20 °C FPA temperature)	30 ke^-/s
Temporal dark noise (Gain0)	400 e^-
Temporal dark noise (Gain1)	170 e^-
Saturation capacity (Gain0)	1.9 Me^-
Saturation capacity (Gain1)	39 ke^-
Dynamic range (Gain0)	73 dB
Dynamic range (Gain1)	47 dB
Pixel operability	>99.5 %
Exposure time	6 µs to 1250 ms [1]
Maximum frame rate at full resolution	100 fps
Temperature control	Dual-stage thermo-electric cooling (TEC2)
Analog gain levels	Gain0, Gain1
Gain factor	50
A/D converter	14-bit
Image buffer size	256 MB
Stream hold capacity	397 frames at full resolution

[1] Maximum exposure value given is valid for Gain0 and sensor temperature of -20°C. Even longer exposures can be set, but the image quality may deteriorate.

Table 72: G-032 SWIR Cool TEC2 - Image and performance specifications

Output

Parameter	Values
Digital interface	GigE Vision (based on IEEE 802.3 1000BASE-T)
Bit depth	8-, 12-, 14-bit
Pixel formats	Mono 8, Mono 12, Mono 12Packed, Mono 14

Table 73: G-032 SWIR Cool TEC2 - Output specifications

General purpose input and output

Parameter	Values
Opto-isolated I/Os	1 input, 2 outputs
RS232	up to 115,200 bits/second, 8N1 (adjustable)
LVTTL I/Os	1 input, 1 output

Table 74: G-032 SWIR Cool TEC2 - General purpose input and output specifications

Mechanics

Parameter	Values
Body dimensions (L × W × H) without lens adapter	90 mm × 80 mm × 80 mm
Lens mount	C-Mount, F-Mount, M42-Mount available
Mass, body only, without adapter	790 g
Mass, with C-Mount adapter	810 g
Mass, with F-Mount adapter	860 g
Mass, with M42-Mount adapter	830 g

Table 75: G-032 SWIR Cool TEC2 - Mechanics specifications

Operating conditions

Parameter	Values
Operating temperature	-20 °C to +55 °C (case)
Storage temperature	-30 °C to +70 °C (ambient)
Sensor cooling temperature, setpoints	-20 °C (default and calibrated) -5 °C, +10 °C (other setpoints) or user-configurable
Relative humidity	10 % to 95 %, non-condensing
Power requirements (DC)	10.8 V to 30.0 V or via PoE+ (IEEE 802.3at Type 2 Class 4)
Max. power consumption	22 W (PoE+), 19 W (12 VDC)
Typical power consumption without cooling	8 W (PoE+), 6 W (12 VDC)

Table 76: G-032 SWIR Cool TEC2 - Operating conditions

Absolute quantum efficiency

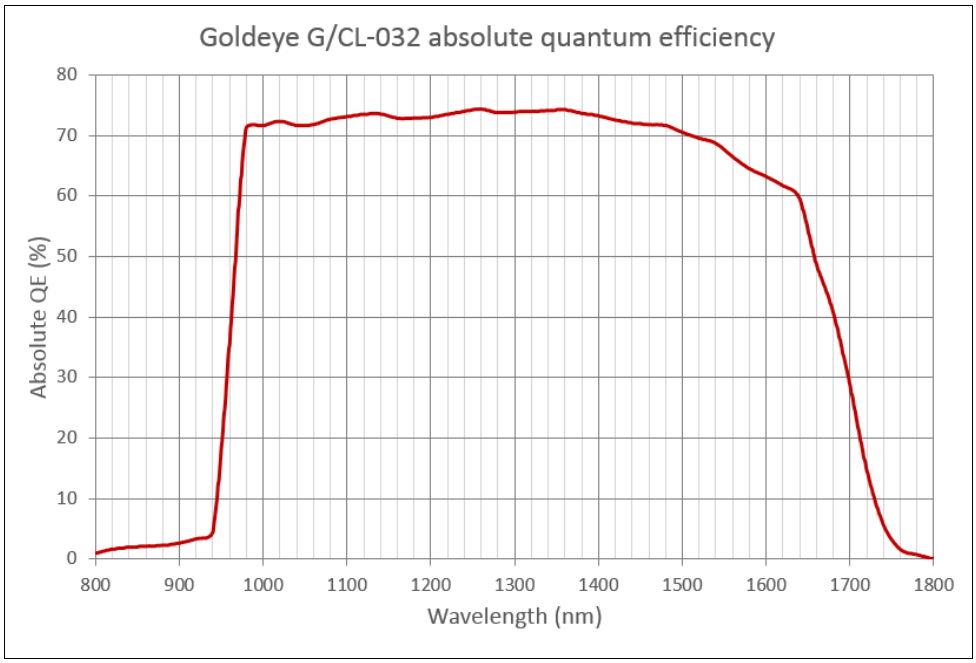

Figure 18: G-032 SWIR Cool TEC2 - Absolute quantum efficiency

Resolution and ROI frame rates

The maximum frame rate achievable with Goldeye G-032 models (in frames per second — fps) is determined by the ROI size. Calculate the maximum frame rate using the following formula.

$$\text{FrameRate} = \frac{10,000,000}{\left[(V+4)\times\left(\frac{H}{4}+32\right)\right]+131}$$

H	ROI: horizontal resolution (width). The formula is valid if H ≥ 128. For H always use the value rounded up to the next multiple of 16.
V	ROI: vertical resolution (height). The formula is valid if V ≥ 8. For V always use the value rounded up to the next multiple of 4.

When using the formula, please consider the following:

- Round the denominator down to the next full µs.
- Minimum ROI width is 8 pixels, minimum ROI height is 4 pixels.
- The formula generally outputs very exact values, however when the ROI approaches its minimum size, the accuracy decreases by some degree.
- Computational limitations of the host and image capture software may prevent the camera from achieving maximum frame rates.

Formula 10: Maximum frame rate possible with G-032 models

Examples for maximum frame rates possible with Goldeye G-032 models, using a number of common resolutions, are listed in the following table.

Resolution			
Width	**Height**	**Format name**	**Frame rate max. [fps]**
636	508	Sensor full resolution	100
636	480	Approx. matches VGA format	107
320	240	Matches QVGA format	351
160	120	Matches 1/4 QVGA format	1047
≤ 128	≤ 8	For all resolutions smaller than this, the frame rate remains the same.	11123

Table 77: G-032 SWIR Cool TEC2: Image resolutions and resulting maximum frame rates

To achieve the highest possible frame rates for different formats, it may become necessary to change the GigE streaming features, particularly to adjust the GigE packet size.

- Smaller packets may be advantageous if using small ROIs
- Larger packets may be advantageous if using larger ROIs

Dimensions

Find the dimensions for all Goldeye G-032 Cool TEC2 models in the drawings linked in the following table.

Model	Dimensions
4068520 G-032 Cool TEC2 C-Mount	See Goldeye G, Cool model, dimensions with C-Mount lens adapter on page 128
4068521 G-032 Cool TEC2 F-Mount	See Goldeye G, Cool model, dimensions with F-Mount lens adapter on page 129
4068523 G-032 Cool TEC2 M42-Mount	See Goldeye G, Cool model dimensions with M42-Mount lens adapter on page 130

Table 78: G-032 SWIR Cool TEC2 - Dimensions

Goldeye G-033 SWIR TEC1

Imaging and performance

Parameter	Values
Sensor	InGaAs, progressive scan, electronic full frame shutter
Sensor type	Focal plane array (FPA)
Spectral range	900 nm to 1700 nm
Resolution	640 (H) × 512 (V)
Pixel size	15 µm × 15 µm
Effective chip size	9.6 mm × 7.68 mm
Dark current	110 ke^-/s [1]
Temporal dark noise (Gain0)	390 e^- [1, 2]
Temporal dark noise (Gain1)	53 e^- [1, 2]
Temporal dark noise (Gain2)	32 e^- [1, 2]
Saturation capacity (Gain0)	1.2 Me^- [1, 2]
Saturation capacity (Gain1)	84.8 ke^- [1, 2]
Saturation capacity (Gain2)	25 ke^- [1, 2]
Dynamic range (Gain0)	69 dB [1, 2]
Dynamic range (Gain1)	64 dB [1, 2]
Dynamic range (Gain2)	59 dB [1, 2]
Pixel operability	>99.5 % [1, 2]
Maximum frame rate at full resolution	301 fps (8-bit pixel format)
Exposure time	1 µs to 200 ms [3]
Temperature control	Single-stage thermo-electric cooling (TEC1)
Analog gain levels	Gain0, Gain1, Gain2

[1] Typical values that are determined similar to EMVA 1288 under 1200 nm LED illumination. Given values are mean values of multiple different measurements at 20 °C FPA temperature, if not stated otherwise.

[2] Measured with CDS delay of 12 µs.

[3] Maximum exposure value given is valid for Gain0 and sensor temperature of +25°C. Even longer exposures can be set, but the image quality may deteriorate.

Table 79: G-033 SWIR TEC1 - Image and performance specifications (sheet 1 of 2)

Parameter	Values
Gain factor (Gain 1)	14
Gain factor (Gain 2)	45
A/D converter	14-bit
Image buffer size	256 MB
Stream hold capacity	392 frames at full resolution

[1] Typical values that are determined similar to EMVA 1288 under 1200 nm LED illumination. Given values are mean values of multiple different measurements at 20 °C FPA temperature, if not stated otherwise.

[2] Measured with CDS delay of 12 µs.

[3] Maximum exposure value given is valid for Gain0 and sensor temperature of +25°C. Even longer exposures can be set, but the image quality may deteriorate.

Table 79: G-033 SWIR TEC1 - Image and performance specifications (sheet 2 of 2)

Output

Parameter	Values
Digital interface	GigE Vision (based on IEEE 802.3 1000BASE-T)
Bit depth	8-, 12-, 14-bit
Pixel formats	Mono 8, Mono 12, Mono 12Packed, Mono 14

Table 80: G-033 SWIR TEC1 - Output specifications

General purpose input and output

Parameter	Values
Opto-isolated I/Os	1 input, 2 outputs
RS232	up to 115,200 bits/second, 8N1 (adjustable)
LVTTL I/Os	1 input, 1 output

Table 81: G-033 SWIR TEC1 - General purpose input and output specifications

Mechanics

Parameter	Values
Body dimensions (L × W × H) without lens adapter	78 mm × 55 mm × 55 mm
Lens mount	C-Mount, F-Mount, M42-Mount available
Mass, body only, without adapter	350 g
Mass, with C-Mount adapter	370 g
Mass, with F-Mount adapter	430 g
Mass, with M42-Mount adapter	390 g

Table 82: G-033 SWIR TEC1 - Mechanics specifications

Operating conditions

Parameter	Values
Operating temperature	-20 °C to +55 °C (case)
Storage temperature	-30 °C to +70 °C (ambient)
Sensor cooling temperature, setpoints	+20 °C (default and calibrated) +5 °C, +35 °C, +50 °C (other setpoints) or user-configurable
Relative humidity	10 % to 95 %, non-condensing
Power requirements (DC)	10.8 V to 30.0 V or via PoE (IEEE 802.3at Type 1 Class 0)
Max. power consumption	<12.95 W (PoE), 10.8 W (12 VDC)
Typical power consumption without cooling	8 W (PoE), 6.3W (12 VDC)

Table 83: G-033 SWIR TEC1 - Operating conditions

Absolute quantum efficiency

Figure 19: G-033 SWIR TEC1 - Absolute quantum efficiency

Resolution and ROI frame rate

The maximum frame rate achievable with Goldeye G-033 models (in frames per second — fps) is determined by the ROI size. Calculate the maximum frame rate using the following formula.

$$\text{FrameRate} = \frac{18,000,000}{\left[(V+1)\times\left(\frac{H}{8}+36\right)\right]+254}$$

H	ROI: horizontal resolution (width), the formula is valid if H ≥ **32.** For H always use the value rounded up to the next multiple of multiple of 32.

Formula 11: Maximum frame rate possible with G-033 models (sheet 1 of 2)

V	ROI: vertical resolution (height), the formula is valid if V ≥ 4. For V always use the value rounded up to the next multiple of 4.

When using the formula, please consider the following:

- Round the denominator up or down to the next full µs.
- Minimum ROI width is 8 pixels, minimum ROI height is 4 pixels.
- The formula generally outputs very exact values, however when the ROI approaches its minimum size, the accuracy decreases by some degree.
- Computational limitations of the host and image capture software may prevent the camera from achieving maximum frame rates.

Formula 11: Maximum frame rate possible with G-033 models (sheet 2 of 2)

Examples for maximum frame rates possible with Goldeye G-033 models, using a number of common resolutions, are listed in the following table.

Resolution		Format name	Frame rate max. [fps] (Pixel format)
Width	**Height**		
640	512	Sensor full resolution	301 (8-bit)
640	480	Matches VGA format	321 (8-bit)
320	240	Matches QVGA format	968 (8-bit)
160	120	Matches 1/4 QVGA format	2557 (8-bit or 12-bit)
≤ 128	≤ 24	For all resolutions smaller than this, the frame rate remains the same.	>11627 (8-bit)

Table 84: G-033 SWIR TEC1 - Image resolutions and resulting maximum achievable frame rates

To achieve the highest possible frame rates for different formats, it may become necessary to change the GigE streaming features, particularly to adjust the GigE packet size.

- Smaller packets may be advantageous if using small ROIs
- Larger packets may be advantageous if using larger ROIs

Dimensions

Find the dimensions for all Goldeye G-033 TEC 1 models in the drawings linked in the following table.

Model	Dimensions
4068030 G-033 TEC1 C-Mount	See Goldeye G, dimensions with C-Mount lens adapter on page 125
4068031 G-033 TEC1 F-Mount	See Goldeye G, dimensions with F-Mount lens adapter on page 126
4068033 G-033 TEC1 M42-Mount	See Goldeye G, dimensions with M42-Mount lens adapter on page 127

Table 85: G-033 SWIR TEC1 - Dimensions

Goldeye G-033 SWIR TECless

Imaging and performance

Parameter	Values
Sensor	InGaAs, progressive scan, electronic full frame shutter
Sensor type	Focal plane array (FPA)
Spectral range	900 nm to 1700 nm
Resolution	640 (H) × 512 (V)
Pixel size	15 µm × 15 µm
Effective chip size	9.6 mm × 7.68 mm
Dark current (@ +45 °C FPA temperature)	430 ke^-/s [1]
Temporal dark noise (Gain0)	390 e^- [1, 2]
Temporal dark noise (Gain1)	53 e^- [1, 2]
Temporal dark noise (Gain2)	32 e^- [1, 2]
Saturation capacity (Gain0)	1.2 Me^- [1, 2]
Saturation capacity (Gain1)	84.8 ke^- [1, 2]
Saturation capacity (Gain2)	25 ke^- [1, 2]
Dynamic range (Gain0)	69 dB [1, 2]
Dynamic range (Gain1)	64 dB [1, 2]
Dynamic range (Gain2)	59 dB [1, 2]
Pixel operability	>99.5 %
Maximum frame rate at full resolution	301 fps (in 8-bit pixel format)
Exposure time	1 µs to 200 ms [3]
Temperature control	Without thermo-electric cooling (TECless)
Analog gain levels	Gain0, Gain1, Gain2

[1] Typical values that are determined similar to EMVA 1288 under 1200 nm LED illumination. Given values are mean values of multiple different measurements at +45 °C FPA temperature, if not stated otherwise.

[2] Measured with CDS delay of 12 µs.

[3] Maximum exposure value given is valid for Gain0 and sensor temperature of +45°C. Even longer exposures can be set, but the image quality may deteriorate.

Table 86: G-033 SWIR TECless - Image and performance specifications (sheet 1 of 2)

Parameter	Values
Gain factor (Gain 1)	14
Gain factor (Gain 2)	45
A/D converter	14-bit
Image buffer size	256 MB
Stream hold capacity	392 frames at full resolution

[1] Typical values that are determined similar to EMVA 1288 under 1200 nm LED illumination. Given values are mean values of multiple different measurements at +45 °C FPA temperature, if not stated otherwise.

[2] Measured with CDS delay of 12 µs.

[3] Maximum exposure value given is valid for Gain0 and sensor temperature of +45°C. Even longer exposures can be set, but the image quality may deteriorate.

Table 86: G-033 SWIR TECless - Image and performance specifications (sheet 2 of 2)

Output

Parameter	Values
Digital interface	GigE Vision (based on IEEE 802.3 1000BASE-T)
Bit depth	8-, 12-, 14-bit
Pixel formats	Mono 8, Mono 12, Mono 12Packed, Mono 14

Table 87: G-033 SWIR TECless - Output specifications

General purpose input and output

Parameter	Values
Opto-isolated I/Os	1 input, 2 outputs
RS232	up to 115,200 bits/second, 8N1 (adjustable)
LVTTL I/Os	1 input, 1 output

Table 88: G-033 SWIR TECless - General purpose input and output specifications

Mechanics

Parameter	Values
Body dimensions (L × W × H) without lens adapter	78 mm × 55 mm × 55 mm
Lens mount	C-Mount available, F-Mount and M42-Mount available on request
Mass, body only, without adapter	330 g
Mass, with C-Mount adapter	350 g
Mass, with F-Mount adapter	400 g
Mass, with M42-Mount adapter	370 g

Table 89: G-033 SWIR TECless - Mechanics specifications

Operating conditions

Parameter	Values
Operating temperature	-20 °C to +55 °C (case)
Storage temperature	-30 °C to +70 °C (ambient)
Sensor cooling temperature, setpoints	(Not applicable to TECless models.)
Relative humidity	10 % to 95 %, non-condensing
Power requirements (DC)	10.8 V to 30.0 V or via PoE (IEEE 802.3at Type 1 Class 0)
Max. power consumption	<7.5 W (PoE), 6.0 W (12 VDC)
Typical power consumption without cooling	6.0 W (PoE), 6.0 W (12 VDC)

Table 90: G-033 SWIR TECless - Operating conditions

Absolute quantum efficiency

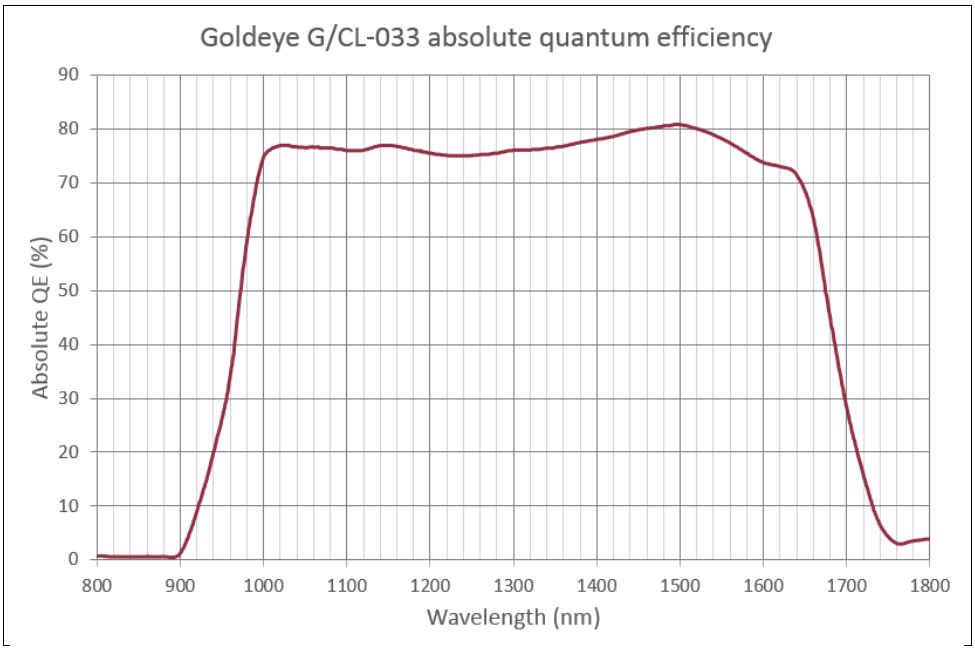

Figure 20: G-033 SWIR TECless - Absolute quantum efficiency

Resolution and ROI frame rate

The maximum frame rate achievable with Goldeye G-033 models (in frames per second — fps) is determined by the ROI size. Calculate the maximum frame rate using the following formula.

$$\text{FrameRate} = \frac{18,000,000}{\left[(V+1)\times\left(\frac{H}{8}+36\right)\right]+254}$$

H	ROI: horizontal resolution (width), the formula is valid if H ≥ **32.** For H always use the value rounded up to the next multiple of multiple of 32.

Formula 12: Maximum frame rate possible with G-033 models (sheet 1 of 2)

V	ROI: vertical resolution (height), the formula is valid if V ≥ 4. For V always use the value rounded up to the next multiple of 4.

When using the formula, please consider the following:

- Round the denominator up or down to the next full µs.
- Minimum ROI width is 8 pixels, minimum ROI height is 4 pixels.
- The formula generally outputs very exact values, however when the ROI approaches its minimum size, the accuracy decreases by some degree.
- Computational limitations of the host and image capture software may prevent the camera from achieving maximum frame rates.

Formula 12: Maximum frame rate possible with G-033 models (sheet 2 of 2)

Examples for maximum frame rates possible with Goldeye G-033 models, using a number of common resolutions, are listed in the following table.

Resolution		Format name	Frame rate max. [fps] (Pixel format)
Width	**Height**		
640	512	Sensor full resolution	301 (8-bit)
640	480	Matches VGA format	321 (8-bit)
320	240	Matches QVGA format	968 (8-bit)
160	120	Matches 1/4 QVGA format	2557 (8-bit or 12-bit)
≤ 128	≤ 24	For all resolutions smaller than this, the frame rate remains the same.	>11627 (8-bit)

Table 91: G-033 SWIR TECless: Image resolutions and resulting maximum achievable frame rates

To achieve the highest possible frame rates for different formats, it may become necessary to change the GigE streaming features, particularly to adjust the GigE packet size.

- Smaller packets may be advantageous if using small ROIs
- Larger packets may be advantageous if using larger ROIs

Dimensions

Find the dimensions for the Goldeye G-033 TECless C-Mount in the drawing linked in the following table.

Model	Dimensions
4068730 G-033 TECless C-Mount	See Goldeye G, dimensions with C-Mount lens adapter on page 125
G-033 TECless F-Mount	Models with F-Mount adapter are available on request.
G-033 TECless M42-Mount	Models with M42-Mount adapter are available on request.

Table 92: G-033 SWIR TECless - Dimensions

Camera dimensions

Goldeye CL with C-Mount lens adapter

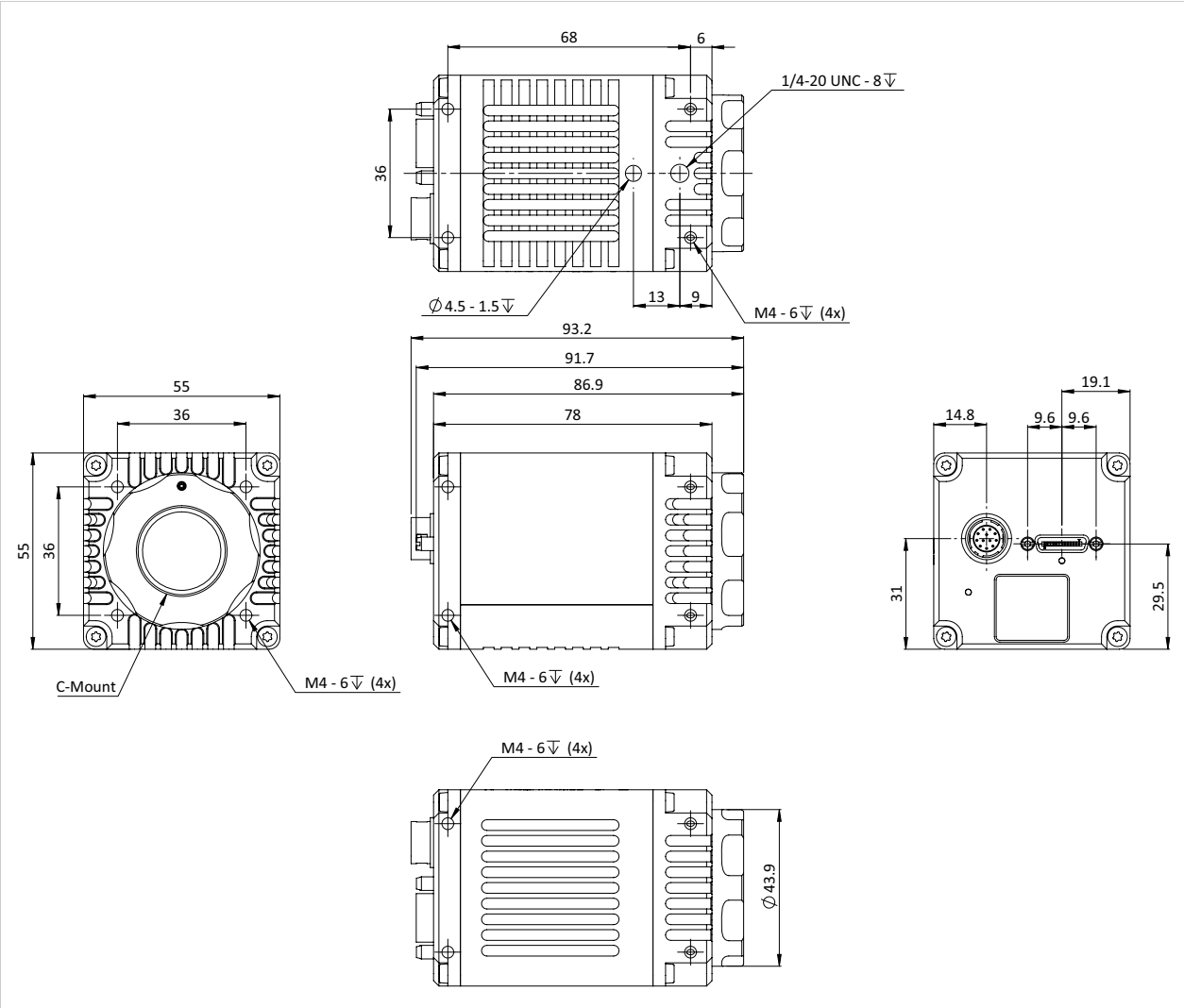

Figure 21: Goldeye CL,
dimensions with C-Mount lens adapter

This drawing is applicable to the C-Mount variants of the following models:

- Goldeye CL-008 SWIR TEC1 on page 56 (Product code 4168080)
- Goldeye CL-032 SWIR TEC1 on page 67 (Product code 4168000)
- Goldeye CL-033 SWIR TEC1 on page 77 (Product code 4168030)
- Goldeye CL-033 SWIR TECless on page 83 (Product code 4168730)

Goldeye CL with F-Mount lens adapter

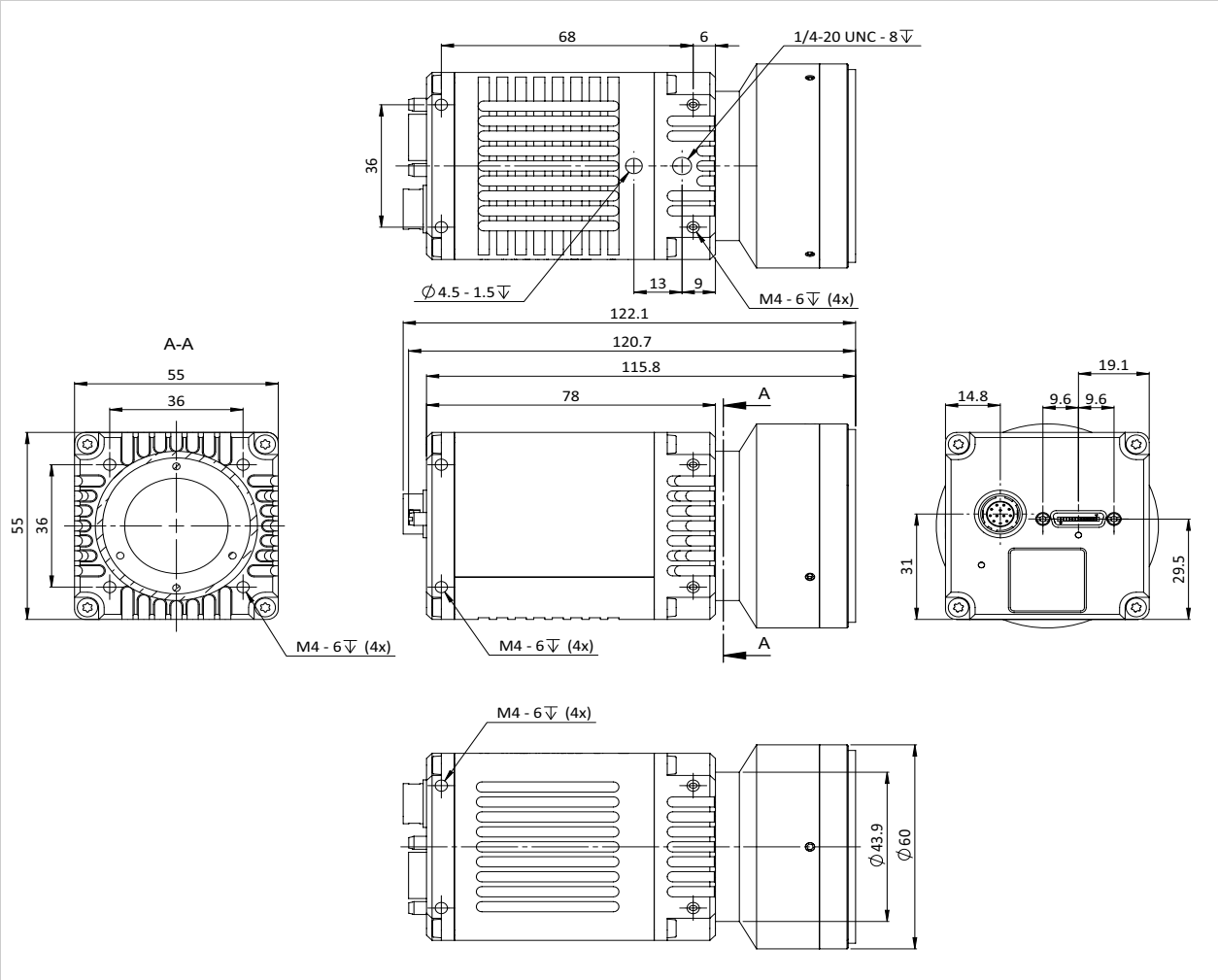

Figure 22: Goldeye CL,
dimensions with F-Mount lens adapter

This drawing is applicable to the F-Mount variants of the following models:

- Goldeye CL-008 SWIR TEC1 on page 56 (Product code 4168081)
- Goldeye CL-032 SWIR TEC1 on page 67 (Product code 4168001)
- Goldeye CL-033 SWIR TEC1 (Product code 4168031)

Goldeye CL with M42-Mount lens adapter

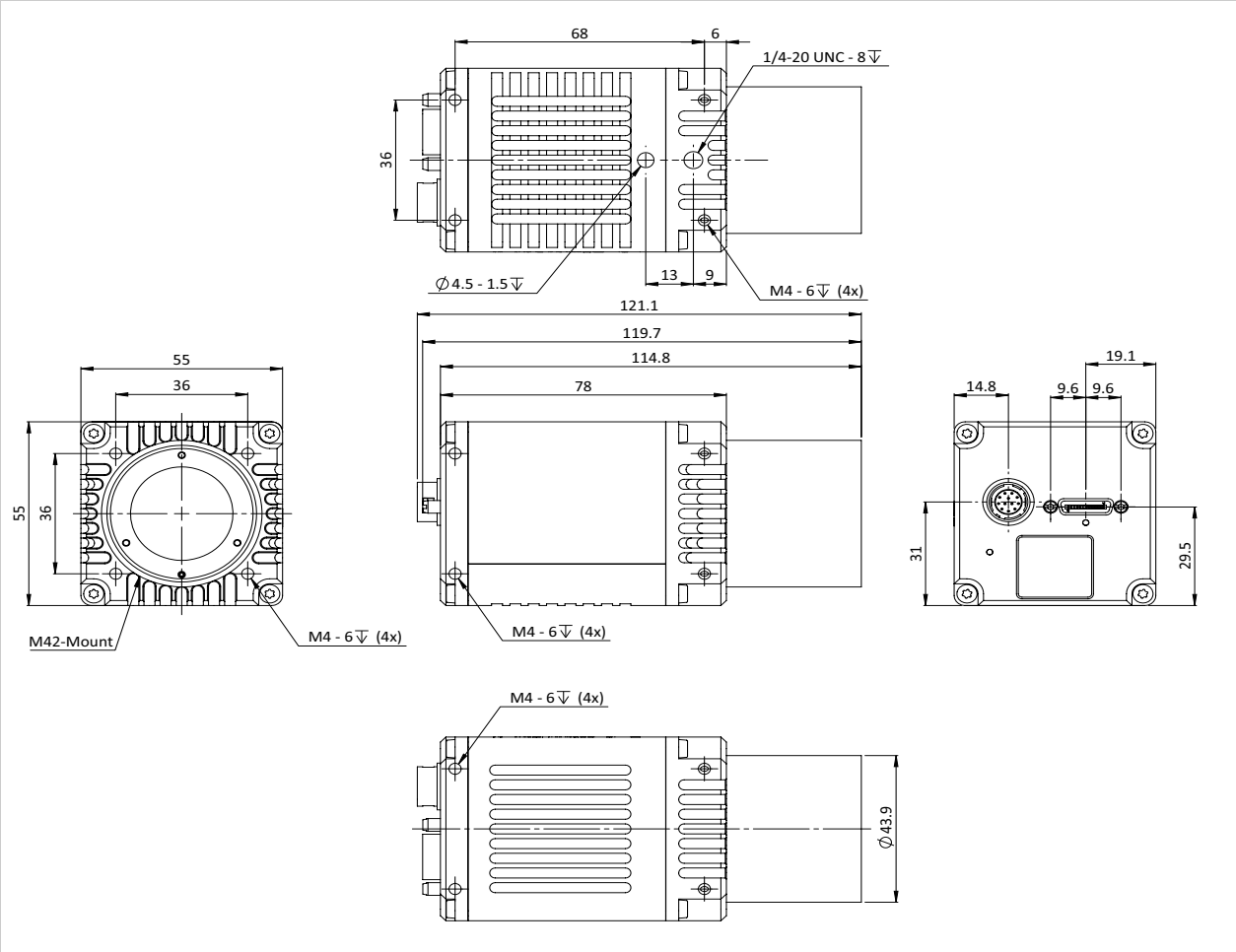

Figure 23: Goldeye CL,
dimensions with M42-Mount lens adapter

This drawing is applicable to the M42-Mount variants of the following models:

- Goldeye CL-008 SWIR TEC1 on page 56 (Product code 4168083)
- Goldeye CL-032 SWIR TEC1 on page 67 (Product code 4168003)
- Goldeye CL-033 SWIR TEC1 on page 77 (Product code 4168033)

Goldeye CL Cool with C-Mount lens adapter

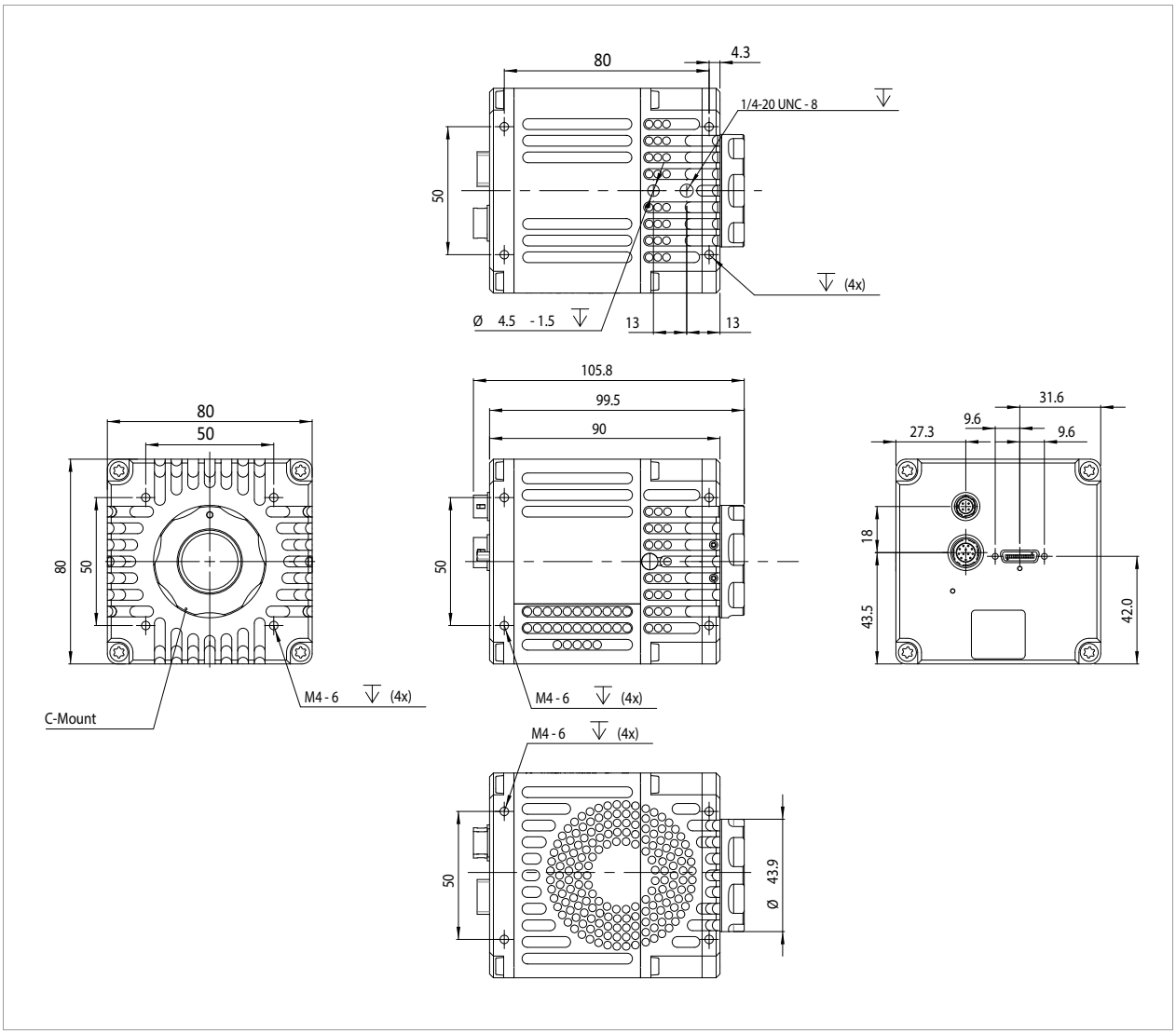

Figure 24: Goldeye CL, Cool model,
dimensions with C-Mount lens adapter

This drawing is applicable to the C-Mount variants of the following models:

- Goldeye CL-008 SWIR Cool TEC1 on page 62 (Product code 4168580)
- Goldeye CL-032 SWIR Cool TEC2 on page 72 (Product code 4168520)

Goldeye G with C-Mount lens adapter

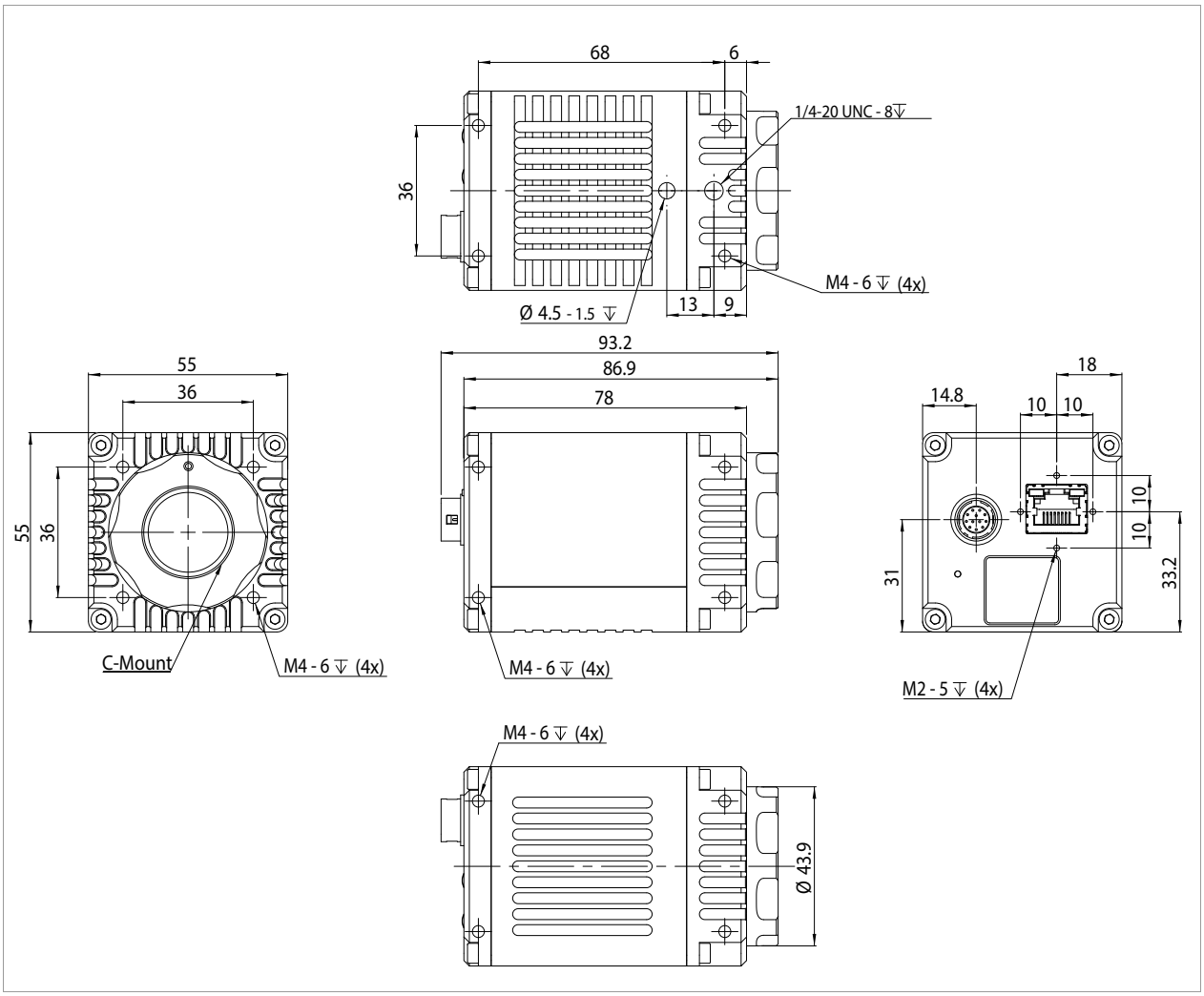

Figure 25: Goldeye G,
dimensions with C-Mount lens adapter

This drawing is applicable to the C-Mount variants of the following models:

- Goldeye G-008 SWIR TEC1 on page 89 (Product code 4068080)
- Goldeye G-032 SWIR TEC1 on page 99 (Product code 4068000)
- Goldeye G-033 SWIR TEC1 on page 109 (Product code 4068030)
- Goldeye G-033 SWIR TECless on page 115 (Product code 4068730)

Goldeye G with F-Mount lens adapter

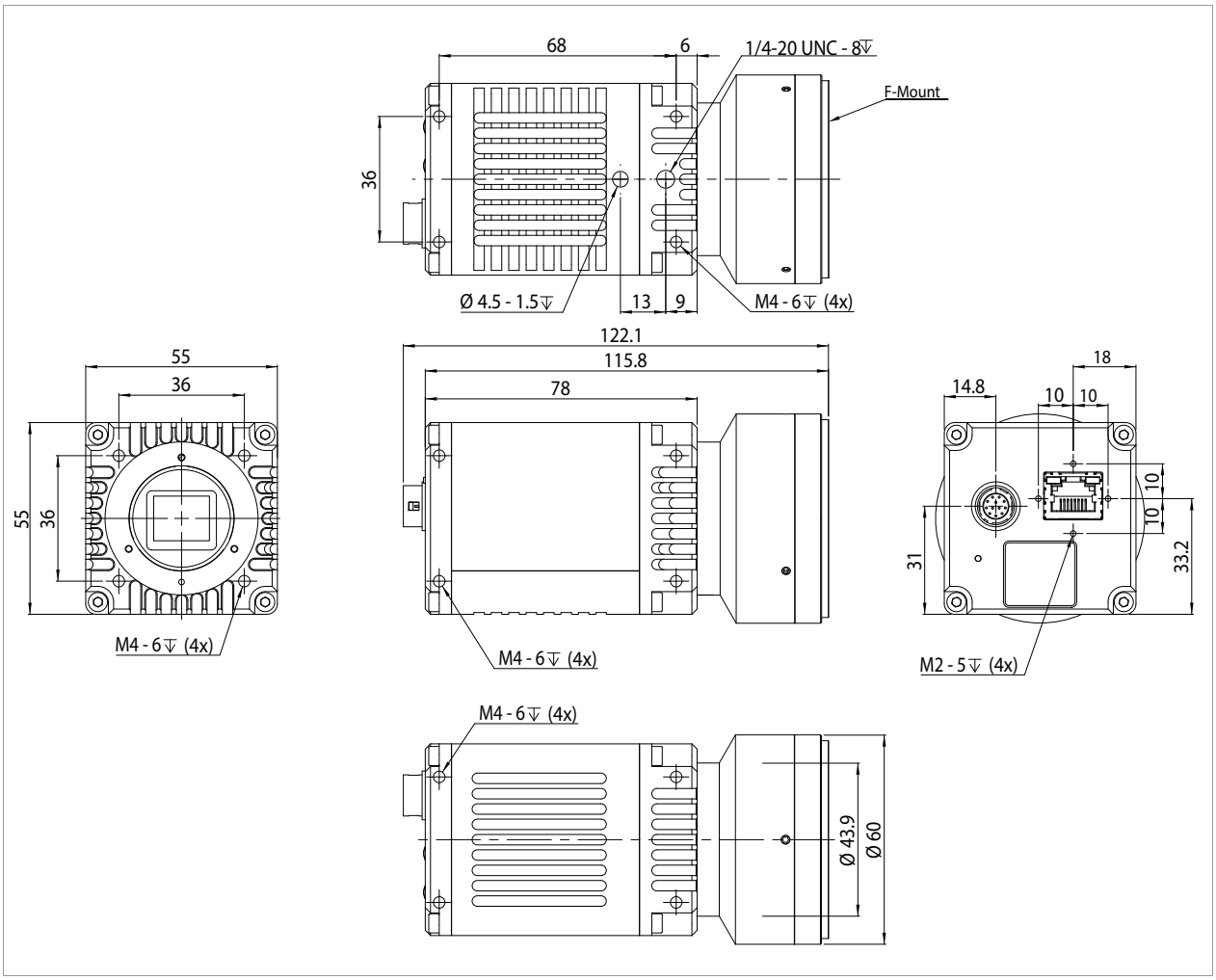

Figure 26: Goldeye G,
dimensions with F-Mount lens adapter

This drawing is applicable to the F-Mount variants of the following models:

- Goldeye G-008 SWIR TEC1 on page 89 (Product code 4068081)
- Goldeye G-032 SWIR TEC1 on page 99 (Product code 4068001)
- Goldeye G-033 SWIR TEC1 on page 109 (Product code 4068031)

Goldeye G with M42-Mount adapter

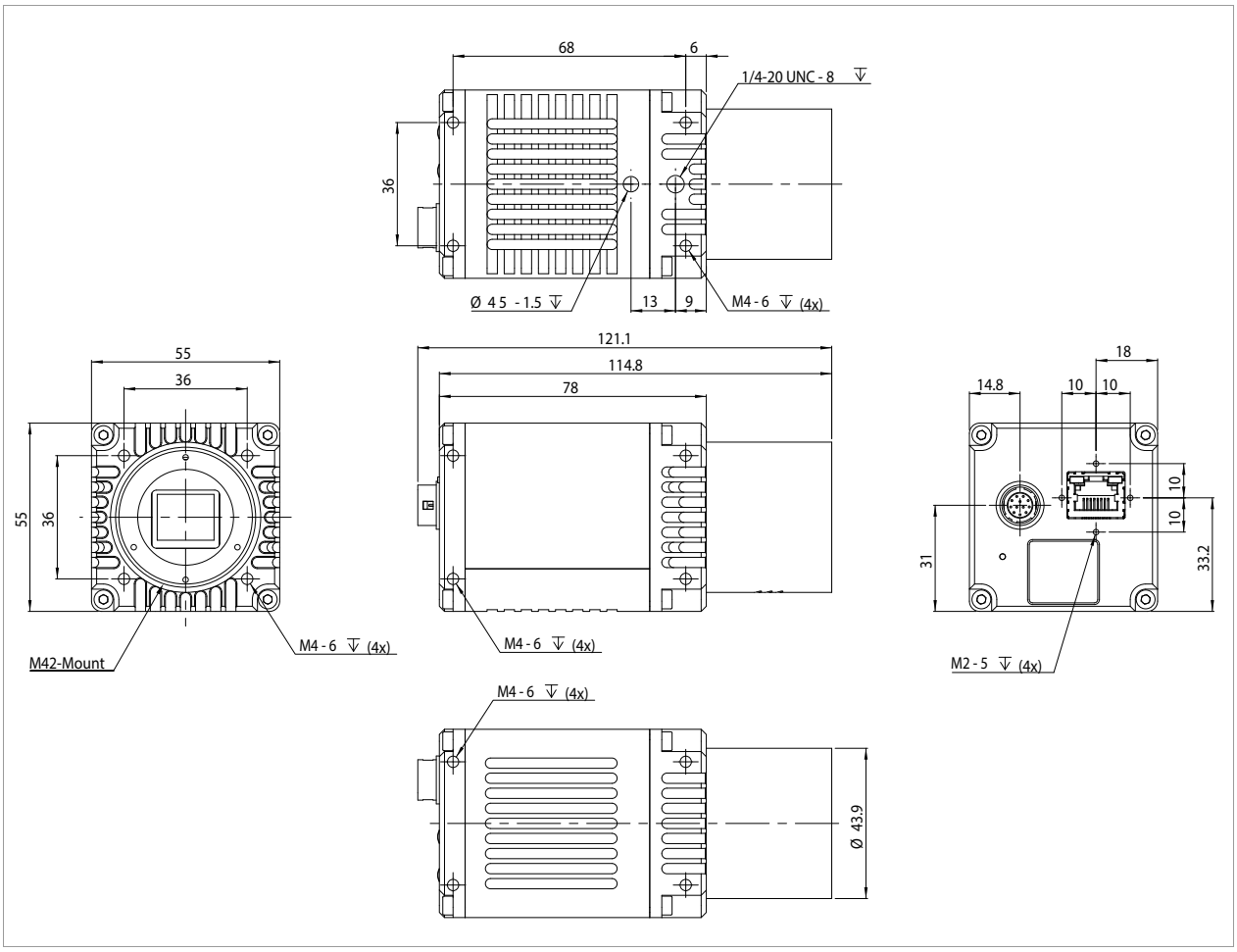

Figure 27: Goldeye G,
dimensions with M42-Mount lens adapter

This drawing is applicable to the M42-Mount variants of the following models:

- Goldeye G-008 SWIR TEC1 on page 89 (Product code 4068083)
- Goldeye G-032 SWIR TEC1 on page 99 (Product code 4068003)
- Goldeye G-033 SWIR TEC1 on page 109 (Product code 4068033)

Goldeye G Cool with C-Mount adapter

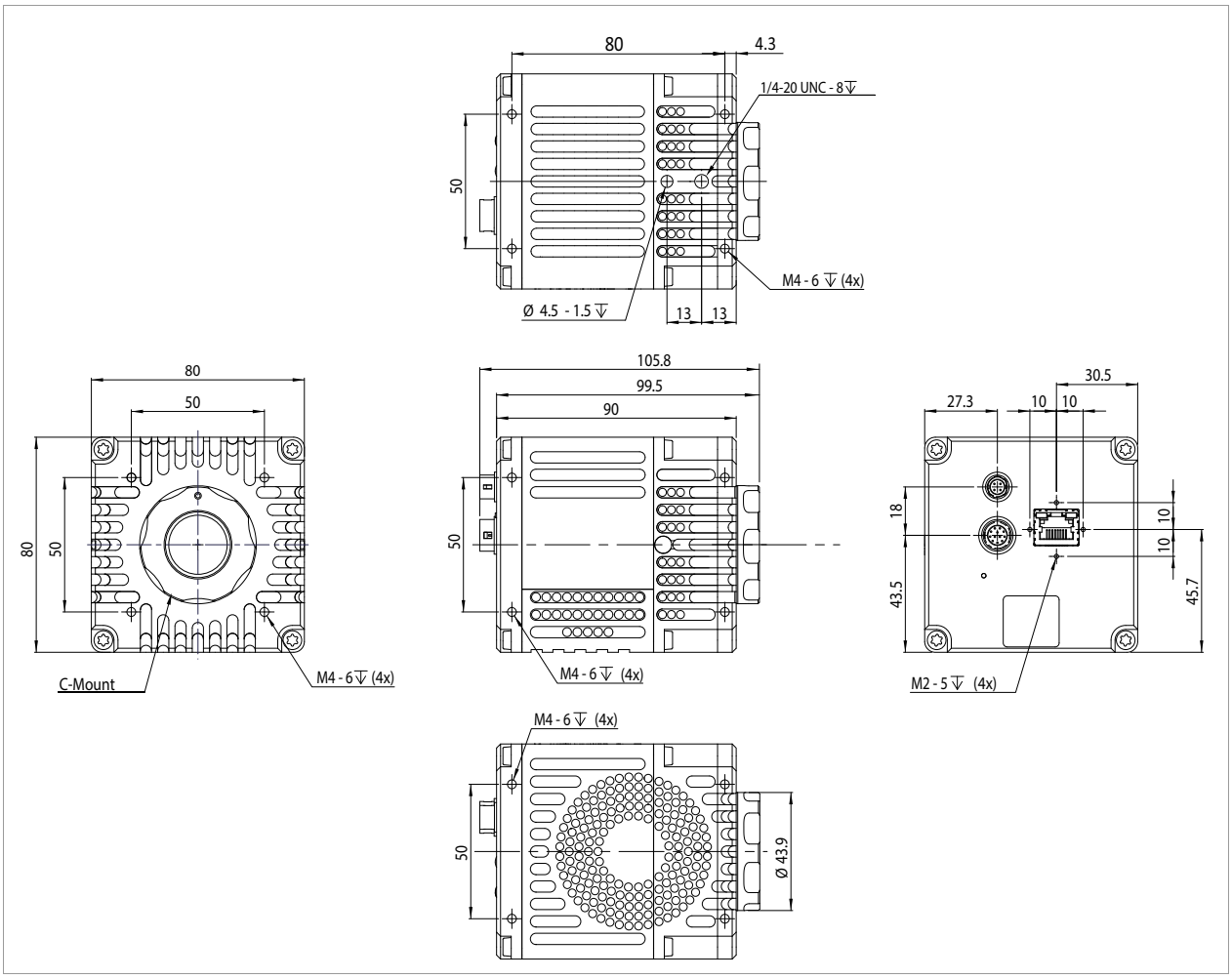

Figure 28: Goldeye G, Cool model, dimensions with C-Mount lens adapter

This drawing is applicable to the C-Mount variants of the following models:

- Goldeye G-008 SWIR Cool TEC1 on page 94 (Product code 4068580)
- Goldeye G-032 SWIR Cool TEC2 on page 104 (Product code 4068520)

Goldeye G Cool with F-Mount lens adapter

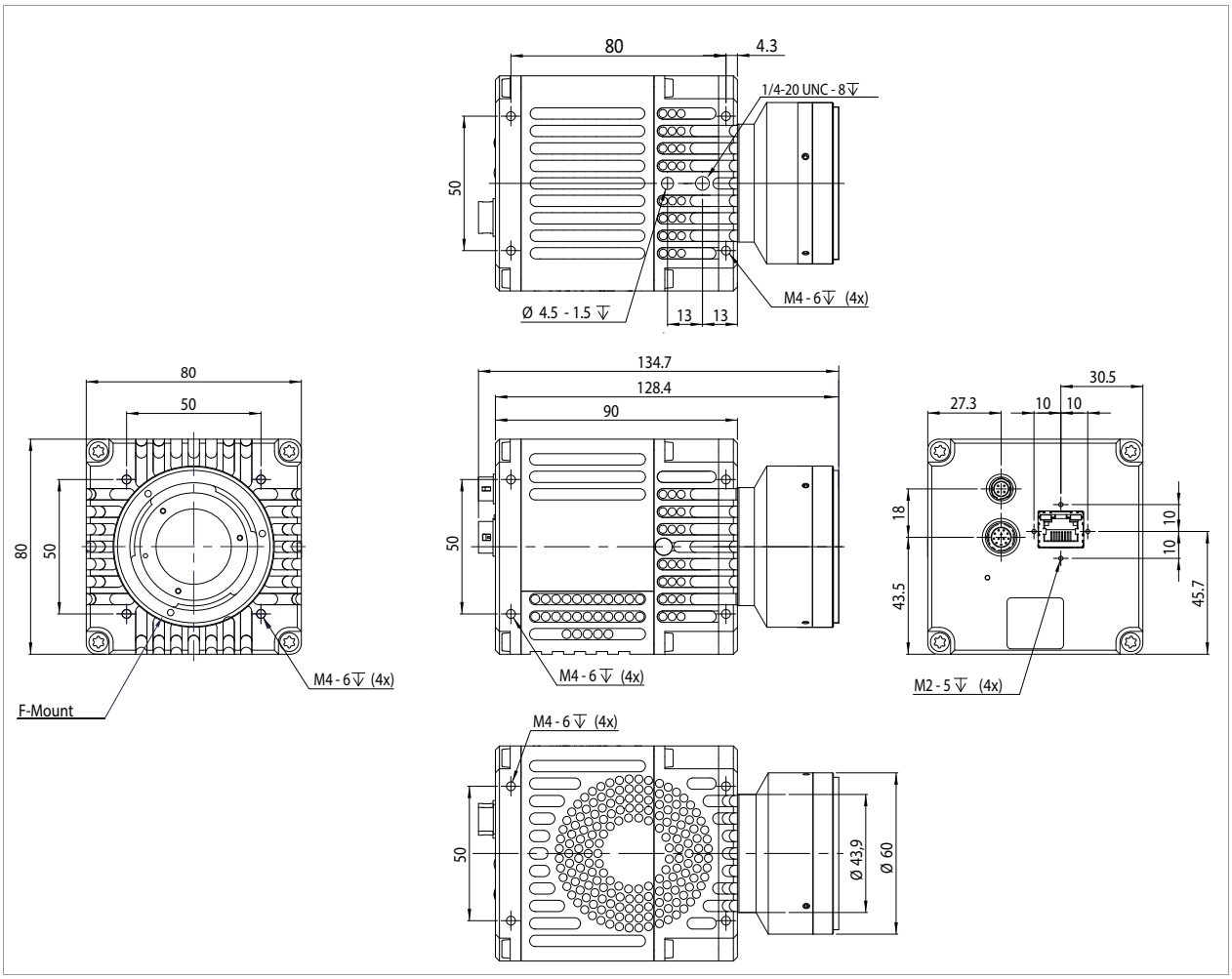

Figure 29: Goldeye G, Cool model, dimensions with F-Mount lens adapter

This drawing is applicable to the F-Mount variant of the following model:

- Goldeye G-032 SWIR Cool TEC2 on page 104 (Product code 4068521)

Goldeye G Cool: M42-Mount lens adapter

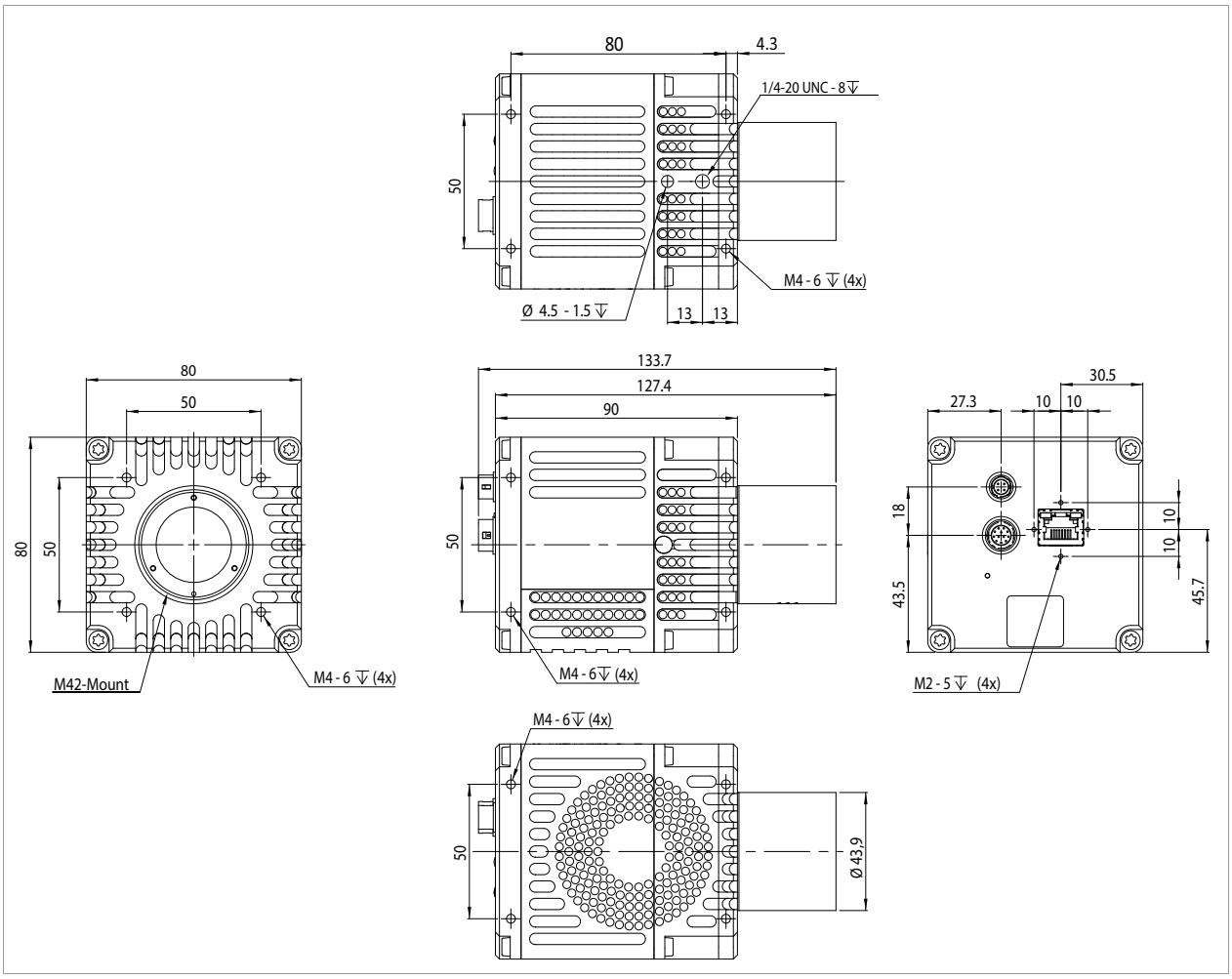

Figure 30: Goldeye G, Cool model dimensions with M42-Mount lens adapter

This drawing is applicable to the F-Mount variant of the following model:

- Goldeye G-032 SWIR Cool TEC2 on page 104 (Product code 4068523)

Sensor position accuracy

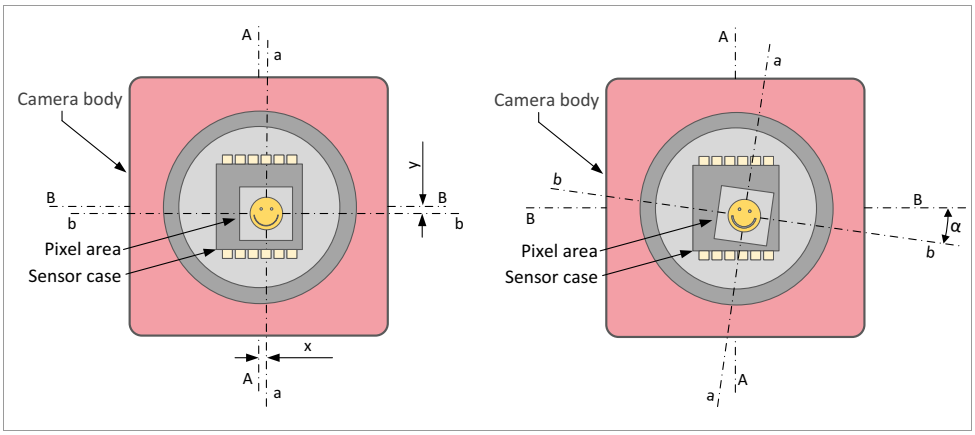

Figure 31: Sensor position accuracy

Method of positioning

Optical alignment of the photo sensitive sensor area into the camera front module (lens mount front flange).

Reference points

Sensor: center of the pixel area (photo sensitive cells) = intersection of the lines a and b.

Camera: center of the camera front flange (outer case edges) = intersection of lines A and B.

Accuracy

Observe the accuracy requirements outlined below for all positioning tasks.

Sensor shift	x / y	± 150 µm
Optical back focal length	z	+ 0 µm to- 200 µm
Sensor rotation	α	± 0.5 °

X/Y - tolerances

x/y- tolerances between the C-Mount hole and the pixel area may be higher.

Accessories

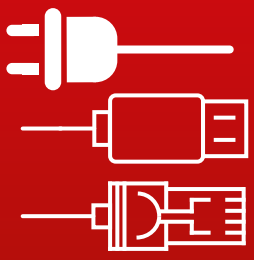

This chapter lists accessories available for Goldeye cameras and includes details about the accessories.

- Ethernet adapters
- Camera Link cables
- Power supplies
- Hirose connectors
- Other accessories

Adapters and connectors

In this section you find a selection of essential accessories to get your Allied Vision camera up and running quickly.
These accessories are also listed in the appropriate places throughout this technical manual.

Overview of all available accessories:

Allied Vision provides accessories to run and connect the Goldeye. To obtain an overview of all accessories available, go to the Allied Vision Accessories webpage:

www.alliedvision.com/en/products/accessories.html

Power supplies

Models with standard housing

Use only with the following Goldeye models:

- G/CL-008 TEC1
- G/CL-032 TEC1
- G/CL-033 TEC1
- G/CL-033 TECless

Model and Description.	Product code
North American supply, 12 V / 1.25 A: Desktop power supply 12-pin Hirose female plug, US plug	02-8003D
European supply: Desktop power supply 12-pin Hirose female plug, EU plug	02-8004D
Power supply, 12 VDC, 15 W, standard Hirose 12p receptacle straight push-pull	E3100002

Table 93: Power supplies for Goldeye standard models

Power supplies for Goldeye Cool models

Use only with the following Goldeye models:

- G/CL-008 Cool TEC1
- G/CL-032 Cool TEC2

Model and Description	Product code
North American and European supply, 12 V / 5 A: Desktop power supply 4-pin Hirose female plug Note users of non-European connectors need an IEC C13 connector to connect to the local AC power.	1021080

Table 94: Power supply for Goldeye Cool models

Hirose 4-pin power connectors and cables

Use only for power supply of the following Goldeye cameras:

- G/CL-008 Cool TEC1
- G/CL-032 Cool TEC2

Model and Description	Product code
Power cable with Hirose 4-pin connector, 2.0 m	1068904
Power cable with Hirose 4-pin connector, 3.0 m	1068905
Power cable with Hirose 4-pin connector, 5.0 m	1068906
Power cable with Hirose 4-pin connector, 10.0 m	1068907

Table 95: Hirose 4-pin power connectors and cables

Ethernet adapters

Use with Goldeye G cameras.

Model and Description	Product code
Standard adapter PCI-E Card, GigE, Intel CT, PCIe x1, 1 port EXPI9301CTBLK	02-3003C
Dual port adapter without PoE PCI-E Card, GigE, Intel Pro1000/PT, PCIe x4, 2 ports	02-3005A
Dual port PoE adapter Adlink GIE72 PCIex4 GigE PoE+ Dual Port Host Controller	12400
Four port PoE adapter Adlink GIE74 PCIex8 GigE PoE+ Quad Port Host Controller	12401

Table 96: Ethernet adapters

Camera Link cables

Use with Goldeye CL cameras.

MDR-26 to SDR-26 cables

Model and Description	Product code
Cable Camera Link, 3.0 m, 85 MHz, 8.4 mm, MDR-26 straight to SDR-26 straight	9001030
Cable Camera Link, 5.0 m, 85 MHz, 8.4 mm, MDR-26 straight to SDR-26 straight	9001032
Cable Camera Link, 10.0 m, 85 MHz, 11.0 mm, MDR-26 straight to SDR-26 straight	9001036

Table 97: Camera Link cables MDR to SDR

SDR-26 to SDR-26 cables

Model and Description	Product code
Cable Camera Link, 3.0 m, 85 MHz, 8.4 mm, SDR-26 straight to SDR-26 straight	9001040
Cable Camera Link, 5.0 m, 85 MHz, 8.4 mm, SDR-26 straight to SDR-26 straight	9001042
Cable Camera Link, 10.0 m, 85 MHz, 11.0 mm, SDR-26 straight to SDR-26 straight	9001046

Table 98: Camera Link cables SDR to SDR

Hirose 12-pin I/O connectors and cables

The connectors or cables available for Goldeye cameras are listed in Table 99.

Use them for both signal input/output and power supply with the Goldeye models listed below.

- G/CL-008 TEC1
- G/CL-032 TEC1
- G/CL-033 TEC1
- G/CL-033 TECless

Use them for signal input/output only with the Goldeye models listed below.

- G/CL-008 Cool TEC1
- G/CL-032 Cool TEC2

Model and Description	Product code
Connector PC-12P 12-pin Female (HR10A-10P-12S) without cable	K7600040
Cable I/O, Power, Trigger 12-pin Hirose female to open ended, 2.0 m	2814
Cable I/O, Power, Trigger 12-pin Hirose female to open ended, 3.0 m	2815
Cable I/O, Power, Trigger 12-pin Hirose female to open ended, 5.0 m	2817
Cable I/O, Power, Trigger 12-pin Hirose female to open ended, 10.0 m	2818
Cable Trigger 2.0 m BNC to Hirose In1 LVTTL , 2 m	1068908
Cable Trigger 5.0 m BNC to Hirose In1 LVTTL , 5 m	1068909

Table 99: Hirose 12-pin I/O connectors and cables

Mount adapters and filters

Separate lens adapters for various mounts are available for purchase from Allied Vision. These adapters fit into the M42-Mount of the camera front flange.

For readily assembled mount adapters with special-purpose filter glass see Table 101.

Model and Description	Product code
Adapter from M42 to C-Mount without filter glass	1068100
Adapter from M42 to F-Mount without filter glass	1068101
Adapter from M42 to M42-Mount without filter glass	1068103

Table 100: Mount adapters for Goldeye Cameras

Bandpass filters 1450 nm (water filters)

Readily assembled mount adapters with filter glass for several lens mounts are available for purchase from Allied Vision.

The lens adapters with bandpass filter already fitted that are listed below have a bandpass filter with a CWL of 1450 nm and FWHM bandwidth of 26.5 nm.

Model and Description	Product code
Adapter from M42 to C-Mount with 1450 nm bandpass filter	1068140
Adapter from M42 to F-Mount adapter with 1450 nm bandpass filter	1068141
Adapter from M42 to M42-Mount adapter with 1450 nm bandpass filter	1068143

Table 101: Bandpass filters 1450 nm

Other accessories

Heat sink set

To improve the cooling capability of the temperature-stabilized and TECless Goldeye models, a heat sink set is available that can be mounted to the camera by the customer. Up to four heat sinks can be fitted to one camera.

Model and Description	Product code
Heat sink set for Goldeye G/CL cameras, including thermal interface pad, fixtures, and mounting tool	1068300

Table 102: Heat sink set for Goldeye models

Filter mounting sets

Each filter mounting set consists of one filter retaining ring, fixtures, and a fixing tool.

Model and Description	Product code
Filter mounting set for Goldeye G/CL C-Mount adapter, including filter retaining ring, fixtures, tool	1068800
Filter mounting set for Goldeye G/CL F-Mount adapter or M42-Mount adapter, including filter retaining ring, fixtures, tool	1068801

Table 103: Filter mounting sets for Goldeye models

Filters and mounts

This chapter includes:

- Information about the lens mounts available for the Goldeye camera family
- Available filter options and how to change filters

The Goldeye is available with lens adapters for C-Mount, F-Mount, and M42-Mount to support lenses of different makes and models.

Each lens adapter has a recess to accommodate suitable filters.

Changing the lens adapter

The lens adapter is screwed onto the M42 thread of the camera body. To exchange it with a different adapter, unscrew it and screw on the other adapter.

For consistent image quality, we recommend using only Allied Vision lens adapters.

Take special care when removing filter or protection glass.

- Removing the filter from the camera requires special care.
- Ask your distribution partner for assistance if you are not confident with the procedure.
- To avoid contamination, never touch optical surfaces with bare hands.

Remove mount adapters carefully

- All mount adapters of Goldeye cameras are secured with locking screws. To avoid damage to the camera, these locking screws need to be untightened before removing or changing the mount adapter.

  See Figure 32 for the position of the locking screws.
- To avoid damage to the thread, never use any tools to screw the mount adapter on or off.

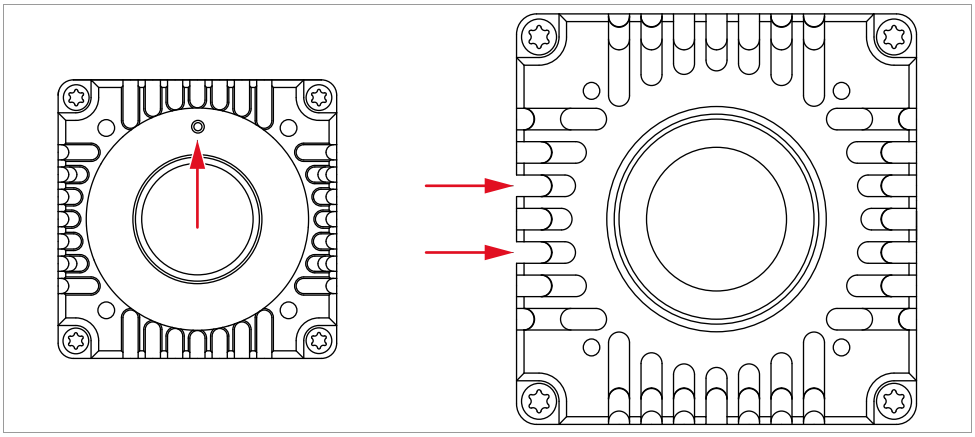

Figure 32: Position of safety screws on mount adapters:
Left: Goldeye G/CL-008, G/CL-032 and G/CL-033
Right: Goldeye G/CL-008 Cool and G/CL-032 Cool

C-Mount lens adapter

A separate lens adapter for C-Mount lenses is available for purchase from Allied Vision. This adapter fits into the M42-Mount of the camera front flange.

See Table 104 for more information.

For readily assembled mount adapters with special-purpose optical filter, see Bandpass filters 1450 nm assembled on page 153.

Model and Description	Product code
Adapter from M42 to C-Mount without optical filter	1068100
Filter mounting set for Goldeye G/CL C-Mount adapter, including filter retaining ring, fixtures, tool	1068800

Specifications of the C-Mount adapter

Parameter	Dimensions
Suitable optical filter, diameter	25.0 mm to 25.5 mm
Suitable optical filter, thickness	up to 2.5 mm
Maximum protrusion with filter	6.6 mm

Table 104: Specifications of the C-Mount adapter

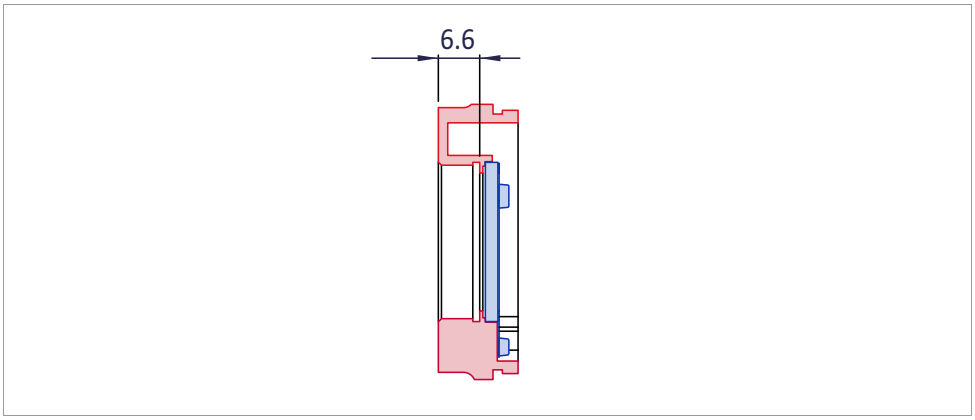

Figure 33: Cross section of the C-Mount adapter (red) with filter (blue) and max. protrusion

Changing the filter in the C-Mount adapter

If the C-Mount adapter has an optical filter fitted, it is possible to change it filter glass. (See Bandpass filters 1450 nm assembled on page 153 for more details on mount adapters with pre-fitted filters.)

To change the filter of the C-Mount lens adapter, follow the instructions outlined below.

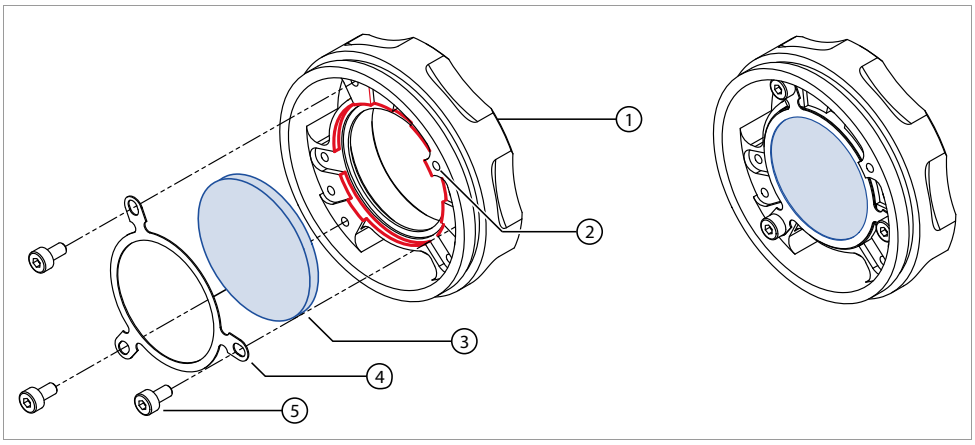

Figure 34: Changing the filter in the C-Mount adapter

Do not remove the adapter if a lens is mounted to the adapter. Ensure there is no lens mounted to the adapter.

Removing the adapter from the camera

1. Unscrew the adapter (1) from the camera.
   - Loosen the locking screw (2, shown from back of adapter) on the outside of the mount adapter. See Figure 32 on page 140 for the position of the locking screws.

     Use a 1.3 mm hex key for Goldeye models with Cool housing: G/CL-008 Cool and G/CL-032 Cool.

     Use a 0.9 mm hex key for all other models.
   - To avoid penetration of foreign substances into the camera, ensure that the front flange is covered with a dust cap. See Avoiding the necessity of camera cleaning on page 225.

Removing the filter from the mount

1. On the back side of the mount, loosen the three cylinder bolts (5) of the filter fixing ring (4), using a Torx T6 tool.
2. Remove the fixing ring.
3. Remove the existing filter glass (3) from the adapter.

Installing a filter into the mount

1. Insert the new filter glass into the matching recess.
   - See Figure 34 on page 142 (blue = filter, red = filter recess).
   - See Table 104 on page 141 for dimensions of suitable filter glasses.
2. Reinsert the fixing ring into the adapter.
3. Fix the ring with the three cylinder bolts. Note there are three sets of threads to suit filter glasses of different thickness.
   - Tighten the bolts with a maximum torque of 0.25 Nm.

Attaching the mount to Goldeye standard models

1. Screw the adapter into the camera.
2. Tighten the locking screw with a max. torque of 0.1 Nm.

Attaching the mount to Goldeye Cool models

When used with Goldeye Cool models, the mount adapter is secured by two locking screws on the side of the camera. The thread in the mount adapter needs to be closed with a thread plug to avoid light incidence.

To apply the thread plug to a C-Mount adapter, follow the steps outlined below.

1. Push the thread plug through the locking thread, from front to back, until the end lines up with the adapters front plane.
2. Cut off the excess length on the backside of the mount adapter with a sharp knife or scissors.

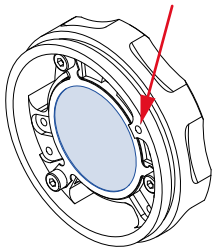

Figure 35: Position to cut off the thread plug on the backside of the mount adapter.

F-Mount lens adapter

A separate lens adapter for F-Mount lenses is available for purchase from Allied Vision. This adapter fits into the M42-Mount of the camera front flange.

For readily assembled mount adapters with special-purpose filter glass, see Bandpass filters 1450 nm assembled on page 153.

Model and Description	Product code
Adapter from M42 to F-Mount without filter glass	1068101
Filter mounting set for Goldeye G/CL F-Mount adapter or M42-Mount adapter, including filter retaining ring, fixtures, tool	1068801

Specifications of the F-Mount adapter

Parameter	Dimensions
Suitable filter glass, diameter	29.5 mm to 30.1 mm
Suitable filter glass, thickness	2.0 mm to 2.5 mm
Maximum protrusion with filter	35.1 mm

Table 105: Specifications of the F-Mount adapter

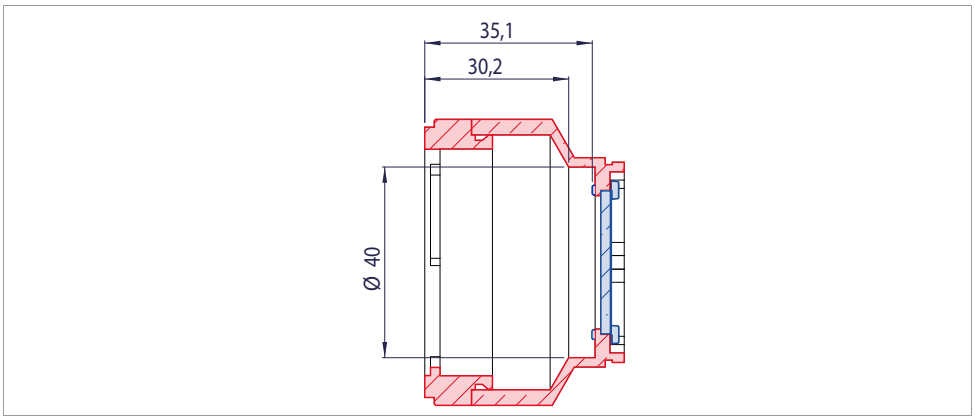

Figure 36: Cross section of the F-Mount adapter (red) with filter (blue) and max. protrusion

Changing the filter in the F-Mount adapter

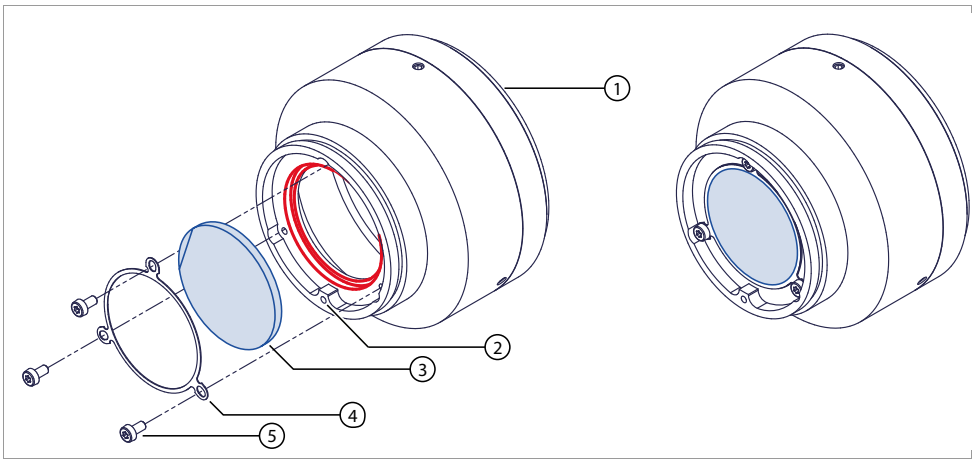

Figure 37: Changing the filter in the F-Mount adapter

If the F-Mount adapter has a filter glass fitted, it is possible to change the filter glass. (See Bandpass filters 1450 nm assembled on page 153 for more details on mount adapters with pre-fitted filters.)

To change the filter of the F-Mount lens adapter, follow the instructions outlined below.

Removing the adapter from the camera

1. Remove the lens that might be screwed into the F-Mount adapter.
2. Unscrew the adapter (1) from the camera.
   - Loosen the locking screw (2, shown from back of adapter) on the outside of the mount adapter. See Figure 32 on page 140 for the position of the locking screws.

     Use a 0.9 mm hex key for Goldeye G/CL-008, G/CL-032 and G/CL-033.

     Use a 1.3 mm hex key for Goldeye G/CL-008 Cool and G/CL-032 Cool.
   - To avoid penetration of foreign substances into the camera, ensure that the front flange is covered with a dust cap. See Avoiding the necessity of camera cleaning on page 225.

Removing the filter from the mount

1. On the back side of the mount, loosen the three cylinder bolts (5) of the filter fixing ring (4), using a Torx T6 tool.
2. Remove the fixing ring.
3. Remove the existing filter glass (3) from the adapter.

Installing a filter into the mount

1. Insert the new filter glass into the matching recess.
   - See Table 37 on page 145 (blue = filter, red = filter recess).

- See Table 105 on page 144 for dimensions of suitable filter glasses.

2. Insert the fixing ring into the adapter.
3. Fix the ring with the three cylinder bolts.
   - Tighten the bolts with a max. torque of 0.25 Nm.

Attaching the mount to the camera

1. Screw the adapter into the camera again.
2. Tighten the locking screw with a maximum torque of 0.1 Nm.

M42-Mount lens adapter

To avoid damage to the camera by lens protrusion, a separate lens adapter for M42-Mount lenses is available for purchase from Allied Vision. This adapter fits into the M42-Mount of the camera front flange.

For readily assembled mount adapters with special-purpose filter glass, see Bandpass filters 1450 nm assembled on page 153.

Model and Description	Product code
Adapter from M42 to M42-Mount without filter glass	1068103
Filter mounting set for Goldeye G/CL F-Mount adapter or M42-Mount adapter, including filter retaining ring, fixtures, tool	1068801

To avoid scratching or other damages to filter glasses, always store away unused filter glasses carefully.

Never use the camera without a mount adapter.

To avoid damaging the sensor or sensor board, never try to screw a lens directly into the M42-Mount of the camera front flange. Always use the M42-Mount adapter when working with M42-lenses.

Specifications of the M42-Mount adapter

Parameter	Dimensions
Suitable filter glass, diameter	29.5 mm to 30.1 mm
Suitable filter glass, thickness	2.0 mm to 2.5 mm
Maximum protrusion with filter	34 mm

Table 106: Specifications of the M42-Mount adapter

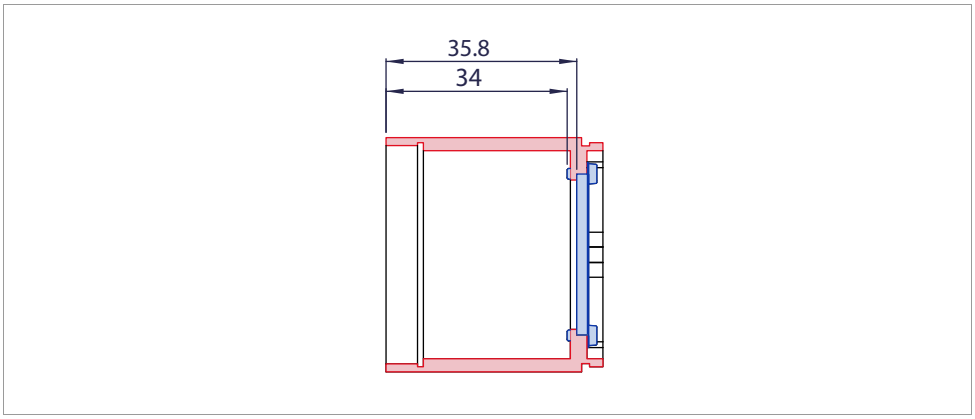

Figure 38: Cross section of the M42-Mount adapter (red) with filter (blue) and max. protrusion

Changing the filter in the M42-Mount adapter

If the M42-Mount adapter has an optical filter fitted, it is possible to change it. (See Bandpass filters 1450 nm assembled on page 153 for more details on mount adapters with pre-fitted filters.)

To change the filter of the M42-Mount lens adapter, follow the instructions outlined below.

Removing the adapter from the camera

1. Remove the lens that might be screwed into the M42-Mount adapter.
2. Unscrew the adapter (1) from the camera.
   - Loosen the locking screw (2, shown from back of adapter) on the outside of the mount adapter. See Figure 32 on page 140 for the position of the locking screws.

     Use a 0.9 mm hex key for Goldeye G/CL-008, G/CL-032 and G/CL-033.

     Use a 1.3 mm hex key for Goldeye G/CL-008 Cool and G/CL-032 Cool.
   - To avoid penetration of foreign substances into the camera, ensure that the front flange is covered with a dust cap. See Avoiding the necessity of camera cleaning on page 225.

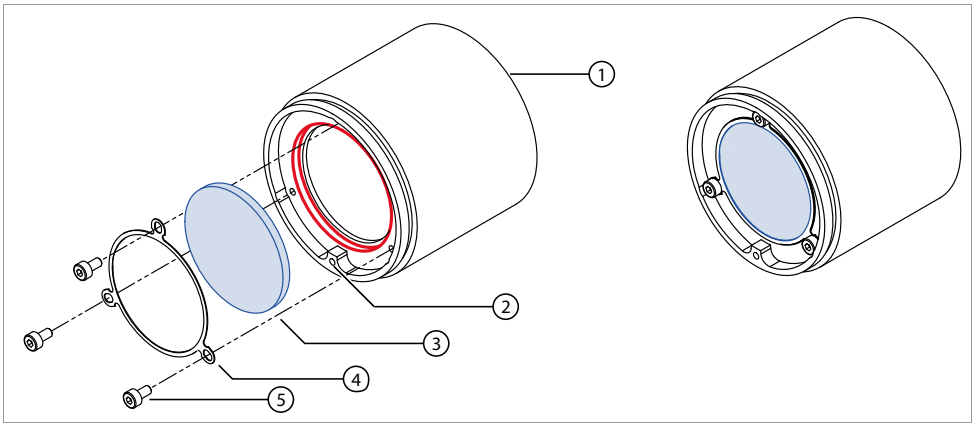

Figure 39: Changing the filter in the M42-Mount adapter

Removing the filter from the mount

1. On the back side of the mount, loosen the three cylinder bolts (5) of the filter fixing ring (4), using a Torx T6 tool.
2. Remove the fixing ring.
3. Remove the existing optical filter (3) from the adapter.

Installing a filter into the mount

1. Insert the new optical filter into the matching recess.
   - See Figure 39 (blue = filter, red = filter recess).
   - See Table 106 on page 147 for dimensions of suitable filter glasses.
2. Insert the fixing ring into the adapter.
3. Fix the ring with the three cylinder bolts.
   - Tighten the bolts with a max. torque of 0.25 Nm.

Attaching the mount to the camera

1. Screw the adapter into the camera.
2. Tighten the locking screw with a maximum torque of 0.1 Nm.

Filters

General terms explained

In general, five types of filters are used to filter visible and invisible light waves of various frequencies.

- **Bandpass filter:** a bandpass filter is translucent for a certain frequency range, rejecting all frequencies above and below the defined range.
- **Long Pass Filter:** a long pass filter is translucent from a certain frequency onwards and for all frequencies above it, thus rejecting all frequencies below.
- **Short Pass Filter:** a short pass filter is translucent up to a certain frequency and for all frequencies below, thereby rejecting all frequencies above.
- **Notch** or **Band Reject** filter: a notch filter is translucent for all frequencies above and below a defined range, thereby rejecting all frequencies of that range. A Band Reject filter can be seen as the opposite of a Bandpass filter.
- **All Pass** or **Phase Shift** filter: an all pass filter is equally translucent for all frequencies, however its function is not to reject any frequencies, but to shift the phase or time of a signal.

Bandpass filters

The Goldeye responds to wavelengths from about 900 nm to 1800 nm. Using a bandpass filter, it is possible to restrict the complete bandwidth to a certain range of wavelengths. That way, only a certain wavelength band is transmitted, all others are rejected.

The describing characteristics of a bandpass filter are properties like optical density, or spectral profile. The main characteristics, however, are the center wavelength (CWL) together with the bandwidth (full width at half maximum, FWHM) being transmitted.

Bandpass filters can cut the transmitted frequencies more or less sharply. Accordingly, the increase or decrease in gain at the edges of the translucent frequency band is more or less steep. This results in certain properties for each bandpass filter, that are defined by the terms described below.

Passband

The passband is the band of wavelengths that the filter allows to pass. Generally, the passband refers to the range of wavelengths between the **Cut-on** and **Cut-off** wavelengths. Therefore, most often the passband is described using the central wavelength and the FWHM.

Stopband

The stopband is the range of wavelengths over which unwanted signals are attenuated. Bandpass filters have two stopbands, one above and one below the passband. As a rule, the end of the stopbands is not precisely defined.

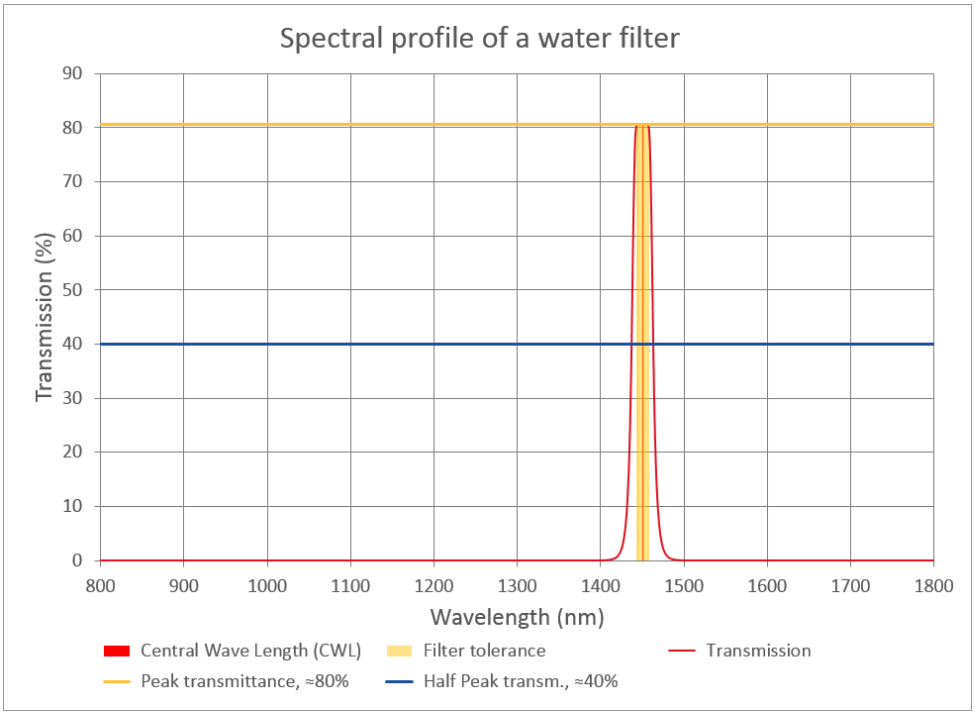

Figure 40: Example of a response curve of a bandpass water filter

CWL (=central wave length)

The wavelength at the center of the filter's passband. This wavelength is the arithmetical mean of the Cut-on and Cut-off wavelengths.

Cut-on and Cut-off wavelength

The Cut-on wavelength is the wavelength within the transition slope from rejection to pass where the transmittance is at 50 percent of peak transmittance. The Cut-off wavelength is the wavelength within the transition slope from pass to rejection where the transmittance is at 50 percent of peak transmittance. The range between both wavelengths is called the **FWHM**.

Peak Transmittance

Also referred to as filter **Transmission Rate**. The peak transmittance describes the maximum amount of light that a filter allows to pass. No filter allows 100 percent of the light to pass, however, good quality filters allow more light to pass through,

thus their transmission rate is closer to 100 percent. Filters of lower quality appear darker, they transmit only slightly more than 50 percent of the light.

Tolerance

The range of wavelengths within the passband, equally on both sides of the central wavelength, that provide transmission rates very close to the peak transmittance around the center wave length.

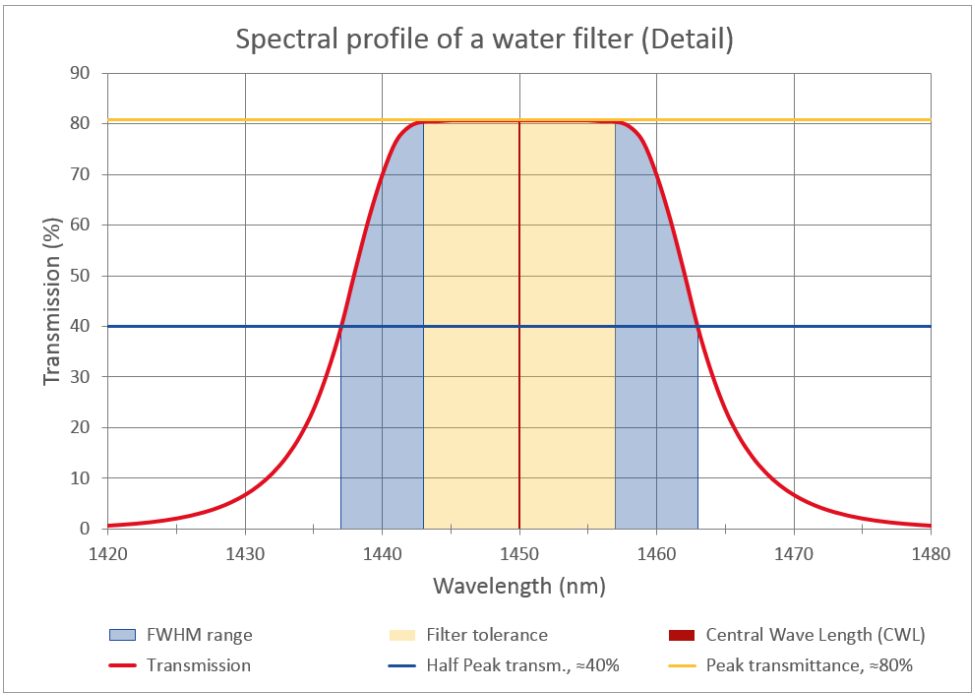

Figure 41: Detail of the water filter pictured in Figure 40 ,
CWL = 1450 nm ±7 nm, FWHM = 26.5 nm

FWHM (Full Width at Half Maximum)

Also called **Half Bandwidth**. Defines the width of the passband of a bandpass filter. It is defined as the range of wavelengths on either side of the CWL where the transmission rate is one half of the peak transmittance or higher.

Half Power Points

Points on both sides of the passband curve of a filter, with a transmission rate that is half of the peak transmittance; the range of wavelengths between these points is called the **FWHM**. The arithmetical mean of the wavelengths of these points is called the **CWL**. The half power points define the **Cut-on** and **Cut-off** wavelengths.

Single band filter, Dual band filter

Single band filters provide only one passband.

Dual band filters provide two passbands that are separated by a rejection band.

Bandpass filters 1450 nm (water filters)

As an example, the center wave length of a water filter displayed in Figure 41 is 1450 nm with a tolerance of ±7 nm, and a FWHM bandwidth of 26.5 nm. The maximum transmission of the passband is around 80 percent. Therefore, the FWHM in this example is defined as the range of frequencies around the CWL where the transmission is 40 percent or above.

Bandpass filters 1450 nm assembled

Readily assembled mount adapters with optical filter for several lens mounts are available for purchase from Allied Vision.

Listed in Table 106 are lens adapters with bandpass filter already fitted. The bandpass filter has a CWL of 1450 nm and a tolerance of ±7 nm.

Model and Description	Product code
C-Mount lens adapter applicable for Goldeye G/CL SWIR cameras, adapter from M42- to C-Mount with 1450 nm bandpass filter, HW 26.5 nm	1068140
F-Mount lens adapter applicable for Goldeye G/CL SWIR cameras, adapter from M42- to F-Mount with 1450 nm bandpass filter, HW 26.5 nm	1068141
M42-Mount lens adapter applicable for Goldeye G/CL SWIR cameras, adapter from M42- to M42-Mount with 1450 nm bandpass filter, HW 26.5 nm	1068143

Table 107: Bandpass Filters 1450 nm

Avoid damage to filter glasses

To avoid scratching or other damages to filter glasses, always store away unused filter glasses carefully.

Camera interfaces

This chapter includes:

- Power supply options
- A general description of the inputs and outputs of the cameras
  - Gigabit Ethernet port
  - Camera Link port

Power supply

Depending on the model, various options are available to provide Goldeye cameras with power. Table 108 lists the options available for all Goldeye models. All Goldeye models do not work in reverse polarity. Refer also to Table 124 and Table 126 on page 175 for details of pin assignment for each connector.

Goldeye model	Hirose	PoE
G-008 TEC1, G-032 TEC1, G-033 TEC1, G-033 TECless	Through the Hirose I/O port, via Pin 1, **External GND**, and Pin 2, **External Power.**	Through the Gigabit Ethernet port by a **PoE (802.3af/at)** supported network card, switch, or injector.
G-008 Cool TEC1	Through the Hirose 4-pin power port, using all four pins of the connector. These models do not use pin 2 of the 12-pin Hirose I/O port.	Through the Gigabit Ethernet port by a **PoE (802.3af/at)** supported network card, switch, or injector.
G-032 Cool TEC2	Through the Hirose 4-pin power port, using all four pins of the connector. These models do not use pin 2 of the 12-pin Hirose I/O port.	Through the Gigabit Ethernet port by a **PoE+ (802.3at)** supported network card, switch, or injector.
CL-008 TEC1, CL-032 TEC1, CL-033 TEC1, CL-033 TECless	Through the Hirose I/O port, via Pin 1, **External GND**, and Pin 2, **External Power.**	(Not applicable to Camera Link models.)
CL-008 Cool TEC1 CL-032 Cool TEC2	Through the Hirose 4-pin power port, using all four pins of the connector. These models do not use pin 2 of the 12-pin Hirose I/O port.	(Not applicable to Camera Link models.)

Table 108: Differences in power supply between various Goldeye models.

Power supply via Hirose connector

Ensure correct power connection

The DC port is not intended to be connected to a DC distribution network.

For Goldeye models of industrial design (using the I/O port)

Use one of the following connections.

- Power supply with Hirose 12-pin connector
- I/O cable with Hirose 12-pin connector in conjunction with a standard power supply adapter

For Goldeye Cool models (using the power port)

Use one of the following connections:

- Power supply with Hirose 4-pin connector
- Power cable with Hirose 4-pin connector in conjunction with a standard power supply adapter.

You cannot use the Hirose 12-pin I/O connector to supply Goldeye Cool models with power.

Ensure a correct power supply

In case the camera is provided with power via the I/O connector, always ensure that the voltage at the camera input lies within the designated requirement of 10.8 V to 30.0 V.

Goldeye G only: Power supply via Gigabit Ethernet

You can supply Goldeye G models with power through the Gigabit Ethernet port by using any standard Power over Ethernet (PoE or PoE+) supported network connection.

The pin assignment of the RJ45/8P8C connector is according to the Ethernet Standard (IEEE 802.3 1000BASE-T), which supports cable lengths of up to 100 m. All Goldeye G models can obtain power from IEEE 802.3af/at compliant Power Sourcing Equipment (PSE) devices, such as switches, injectors, or NICs.

If any Hirose connector provides a valid DC voltage to the camera, and the GigE connector is connected via PoE at the same time, the camera obtains power from the Hirose connector only.

Goldeye G models: Minimizing Power consumption

If the camera operates under higher temperature conditions, you should consider powering the camera via the I/O connector instead of PoE, because PoE contributes to the heat build-up inside the camera.

Refer to chapter Technical specifications on page 56 for details on power consumption.

Quick overview: Power supplies and connectors

12-pin Hirose connector and cables

The cable side Hirose connector (without cable) and I/O cables with Hirose connector are available for purchase from Allied Vision.

Model and Description	Product code
Connector PC-12P 12pin Female (HR10A-10P-12S) without cable	K7600040
Cable I/O, Power, Trigger 12-pin Hirose female to open ended, 2 m	2814
Cable I/O, Power, Trigger 12-pin Hirose female to open ended, 3 m	2815
Cable I/O, Power, Trigger 12-pin Hirose female to open ended, 5 m	2817
Cable I/O, Power, Trigger 12-pin Hirose female to open ended, 10 m	2818

Table 109: Excerpt of available 12-pin Hirose connectors and cables

Power supply for stabilized Goldeye G/CL models

A 12 V power supply with Hirose connector is available for purchase from Allied Vision.

Model and Description	Product code
North American supply, 12 V / 1.25 A: Desktop power supply 12-pin Hirose female plug, US plug	02-8003D
European supply: Desktop power supply 12-pin Hirose female plug, EU plug	02-8004D
Power supply, 12 VDC, 15 W, standard Hirose 12p receptacle straight push-pull	E3100002

Table 110: Available 12 V power supplies (excerpt only).

Power supply for Goldeye G/CL Cool models

A 12 V power supply with Hirose connector is available for purchase from Allied Vision (for Goldeye Cool models only):

Model and Description	Product code
North American and European supply, 12 V / 5 A: Desktop power supply 4-pin Hirose female plug	1021080

Table 111: Available power supply for Goldeye G/CL Cool

Gigabit Ethernet

Goldeye G cameras are equipped with a Gigabit Ethernet interface.

GigE

GigE is the short form for Gigabit Ethernet.

All Allied Vision Goldeye G cameras are GigE Vision compliant cameras with Gigabit Ethernet interface. Allied Vision Goldeye G cameras work with standard Gigabit Ethernet hardware and cables, and serve cable lengths up to 100 m.

GigE Vision

GigE Vision is an interface standard for digital machine vision cameras, developed and maintained by the Automated Imaging Association (AIA). It is built on the Gigabit Ethernet communication protocol and widely supported in the industrial imaging industry.

GenICam

GenICam is the command structure for the GigE Vision camera control. GenICam is administered by the European Machine Vision Association (EMVA).

GenICam establishes a common camera control interface so that third-party soft-ware can communicate with cameras from various manufacturers without customization. It is incorporated as part of the GigE Vision standard.

Gigabit Ethernet port

The Gigabit Ethernet port conforms to the 1000BASE-T standard for Gigabit Ethernet. We recommend using Cat 5e compatible cabling and connectors or better for best performance.

The back panel

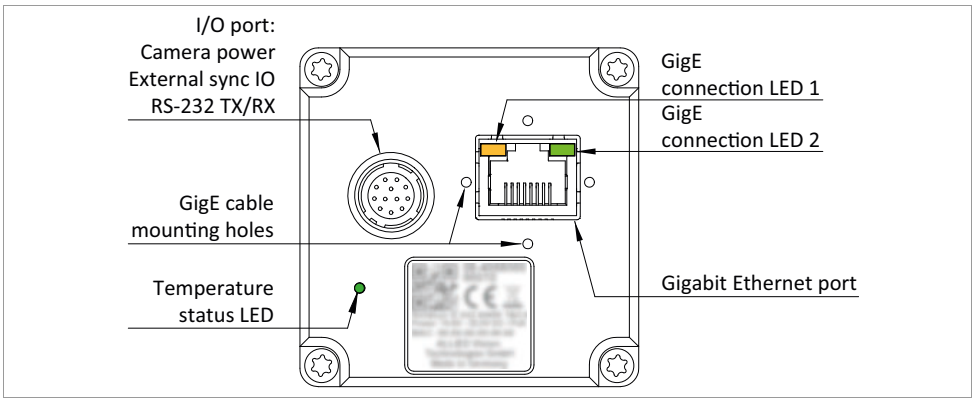

Figure 42: Connection ports and LEDs of a Goldeye G-008 TEC1, G-032 TEC1, G-033 TEC1 and TECless

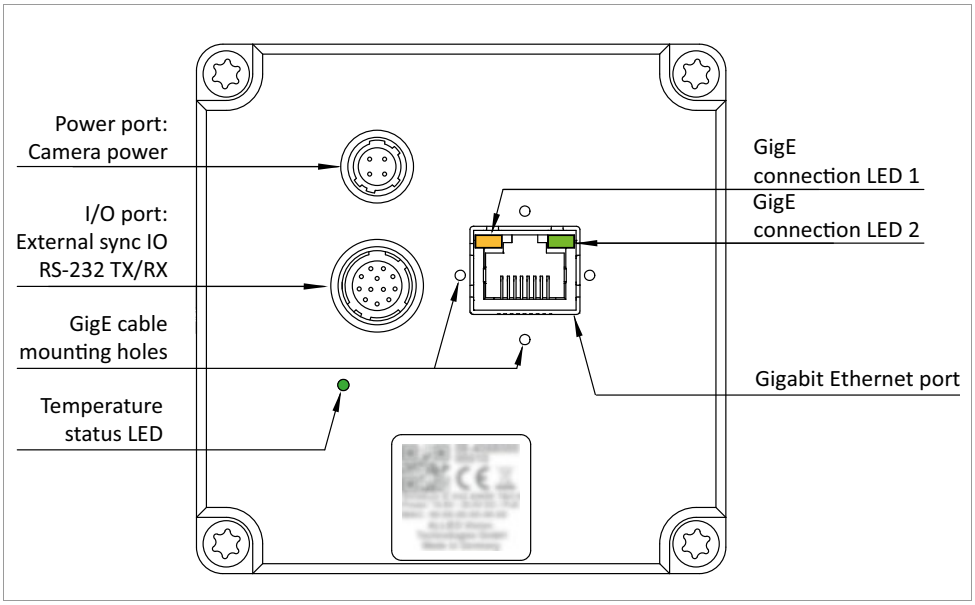

Figure 43: Connection ports and LEDs of a Goldeye G-032 Cool and G-008 Cool

The Goldeye G has the following LEDs on its rear panel:

- Two LEDs at the RJ45/8P8C port showing the GigE connection status.
- One temperature status LED showing the sensor and camera temperature status.

Read more about temperature management

For detailed explanations on temperature status and temperature management of the Goldeye G/CL, refer to chapter Temperature control on page 207.

GigE status LEDs

LED	LED color	Status
LED 1	Amber (cont. or flashing)	Ethernet activity
LED 2	Green flashing	Camera is connected to power
LED 2	Green (cont.)	Once the camera is booted, LED 2 remains green as long as the camera is connected to power, even if connection with the host is lost.

Table 112: Goldeye G: GigE status LEDs

Read more about GigE installation

The chapter Installation and hardware GigE on page 21 describes the hardware installation procedures for Goldeye G cameras.

Quick overview: Ethernet adapter

The Ethernet adapters listed below are available for purchase from Allied Vision.

Model and Description	Product code
Standard adapter PCI-E Card, GigE, Intel CT, PCIe x1, 1 port	02-3003C
Dual port adapter without PoE PCI-E Card, GigE, Intel Pro1000/PT, PCIe x4, 2 port	02-3005A
Dual port PoE adapter Adlink GIE72 PCIex4 GigE PoE+ Dual Port Host Controller	12400
Four port PoE adapter Adlink GIE74 PCIex8 GigE PoE Quad Port Host Controller	12401

Table 113: Available Ethernet adapters (excerpt only)

Recommended third-party Ethernet adapters

For a complete list of recommended third-party Ethernet adapters see the Hardware Selection for Allied Vision GigE Cameras application note on the Allied Vision knowledge base webpage:

www.alliedvision.com/en/support/technical-papers-knowledge-base.html

Camera Link

Goldeye CL cameras are equipped with a Camera Link interface.

Camera Link

Camera Link is a communication interface for vision applications that reduces time and costs necessary for support. All Allied Vision Goldeye CL cameras are compliant with the Camera Link V2.0 standard. Goldeye CL cameras work with standard frame grabbers and cables.

GenCP

The camera is to be controlled using the GenICam GenCP Generic Control Protocol. GenCP is packet based and it uses a virtual 64-bit address space that contains all control registers of the camera.

In the following, a short introduction to GenCP will be given, however it is recommended to also refer to the standard which can be downloaded here:

www.emva.org/wp-content/uploads/GenCP_1.1.pdf

GenICam

GenICam is the shortened form for Generic Interface for Cameras. GenICam establishes a common camera control interface so that third-party software can communicate with cameras from various manufacturers without customization. GenICam is administered by the European Machine Vision Association (EMVA).

Camera Link port

The Camera Link port conforms to the Camera Link V2.0 standard.

The back panel

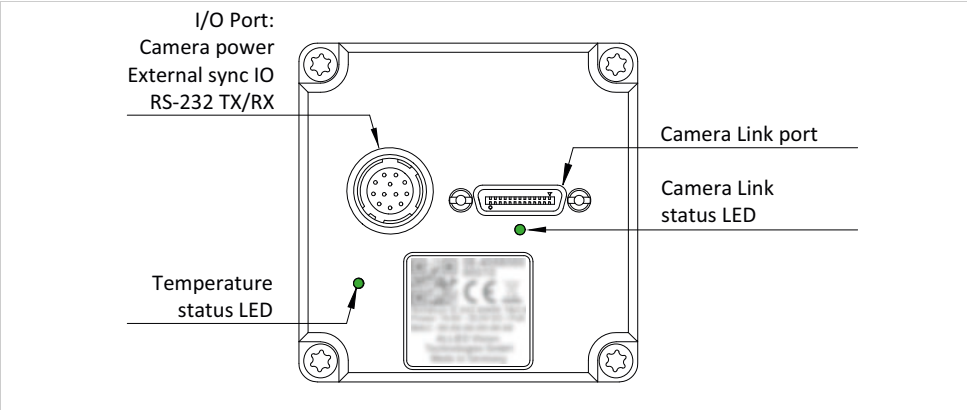

Figure 44: Connection ports and LEDs of a Goldeye CL-008 TEC1, CL-032 TEC1, and CL-033 TEC1 and TECless

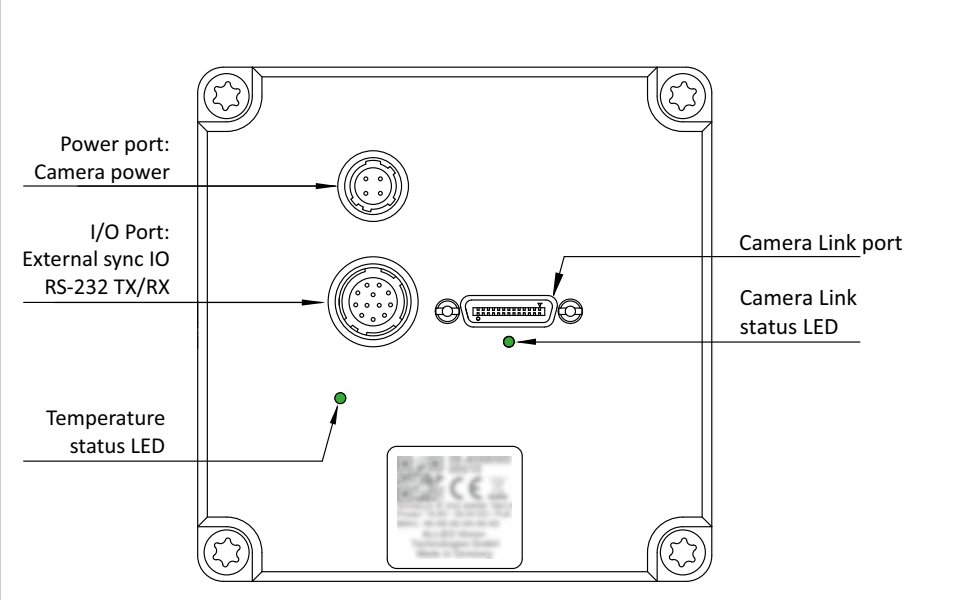

Figure 45: Connection ports and LEDs of a Goldeye CL-032 Cool and CL-008 Cool

The Goldeye CL has the following LEDs on its rear panel:

- One Camera Link status LED showing the Camera Link connection status.
- One temperature status LED showing the sensor and camera temperature status. See Control of the sensor temperature on page 209 for further explanation.

Camera Link status LED

LED color and flashing pattern	Status Description
	Booting
Green-red (1 Hz periodic flashing)	After powering up the camera, it indicates the boot phase with a periodic green-red flashing. A firmware update in progress is indicated the same way.
	Idle
Green (continuous)	A steady green light indicates that the camera is idle and ready.
	Transmission
Green-red (non-periodic fast flashing)	During transmission of image data, the LED toggles between red and green. Traffic on the serial control channel is shown by additional irregular fast green-red flashing. This may cause the LED to appear amber colored.

Read more about temperature management

For detailed explanations on temperature status and temperature management of the Goldeye G/CL, refer to chapter Temperature control on page 207.

Frame grabber requirements

You can use basically any Camera Link Base compatible frame grabber to operate Goldeye CL cameras. However, the following general aspects should be considered for frame grabber selection:

- The frame grabber needs to support the individual pixel clock frequency of the camera (which may be up to 85 MHz, depending on the model). See also Changing the clock frequency on page 165.
- The frame grabber and the host system need to support the pixel data bandwidth delivered by the camera.

  Depending on model and operation mode, a Camera Link Base camera may be able to output up to approximately 170 million 12-bit pixels per second. Assuming a worst-case scenario of unpacked 16 bits per pixel transfer over the host bus, this results in 340 million bytes per second. This is approximately three times the bandwidth of a Gigabit Ethernet port.
- Host software design and system architecture usually affect frame grabber selection as well, for instance the number of cameras connected to the host, the different types of cameras connected, or the availability of a frame grabber specific GenICam transport layer.
- A high transmission rate support (> 115 200 bits per second) of the Camera Link serial port is recommended to improve responsivity of host software.

More information about frame grabbers

For more information about compatibility of various frame grabber models and system installation refer to the sources listed below.

- The chapter Installation and hardware CL on page 34
- The application note Usage of Frame grabbers with Goldeye CL Cameras, downloadable from the Allied Vision website: www.alliedvision.com/en/support/technical-documentation/goldeye-gcl-documentation.html

Technical information and support:

To receive advice on suitable frame grabbers for your application, contact the Allied Vision support team.

support@alliedvision.com

Timing

All Goldeye CL models provide the possibility to adapt the timing parameters of the camera.

The timing of the data transfer is based on the Camera Link pixel clock frequency as well as on enable signals defined in the Camera Link protocol. Selecting a lower clock frequency and extending the gaps between the FVAL and LVAL enable signals help to avoid bit errors in data transfer. Thus, it may allow to extend the usual cable length or to use less expensive cables.

Changing the clock frequency

With each Goldeye CL camera, it is possible to select several clock frequencies, as listed in Table 114 .

Camera	CL-008	CL-032	CL-033
Frequencies	25 MHz 40 MHz	25 MHz 40 MHz	25 MHz 55 MHz 85 MHz

Table 114: Possible clock frequencies with all Goldeye CL camera models.

Changing the clock frequency also has an influence on the maximum frame rate achievable. The following tables summarize the achievable frame rates for all Goldeye Camera Link models.

Resolution		**25 MHz**		**40 MHz**	
Width	**Height**	**Mono 8/12, 2 Taps**	**Mono 14, 1 Tap**	**Mono 8/12, 2 Taps**	**Mono 14, 1 Tap**
320	256	344	274	344	344
320	240	366	292	366	366
160	120	1117	1059	1117	1117
128	32	4273	4273	4273	4273
128	8	12345	12345	12345	12345

Table 115: CL-008 SWIR TEC1 - Image resolutions and resulting maximum achievable frame rates

Resolution		Mono 8, Mono 12 (2 Taps)		Mono 14 (1Tap)	
Width	Height	25 MHz	40 MHz	25 MHZ	40 MHz
320	256	344	344	274	344
320	240	366	366	292	366
160	120	1117	1117	1059	1117
128	32	4273	4273	4273	4273
128	8	12345	12345	12345	12345

Table 116: Goldeye CL-008 - maximum achievable frame rates

Resolution		Mono 8, Mono 12 (2 Taps)		Mono 14 (1Tap)	
Width	Height	25 MHz	40 MHz	25 MHZ	40 MHz
636	508	100	100	73	100
636	480	106	106	77	106
320	256	325	325	274	325
320	240	346	346	292	346
160	120	1015	1015	1015	1015
128	32	3507	3507	3507	3507
128	8	8264	8264	8264	8264

Table 117: Goldeye CL-032 - maximum achievable frame rates

Resolution		Mono 8, Mono 12 (2 Taps)			Mono 14 (1Tap)		
Width	Height	25 MHz	55 MHz	85 MHz	25 MHz	55 MHz	85 MHz
640	512	125	276	301	68	151	234
640	480	134	295	321	73	161	250
320	256	428	251	909	251	553	855
320	240	456	268	968	268	590	912
160	120	1404	912	2557	912	2004	2557
128	32	5524	3802	9174	3802	8333	9174
128	8	17241	12658	25000	12658	25000	25000

Table 118: Goldeye CL-033 - maximum achievable frame rates

Adjusting the gaps

Besides the Camera Link clock frequency, there are four parameters available that can be used for timing control. These parameters affect the gaps between the FVAL and LVAL signals.

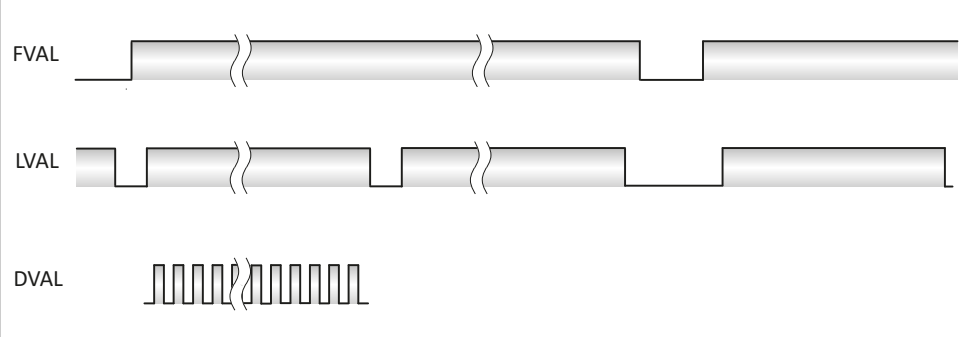

Figure 46: Principle of Camera Link data transfer

FVAL - Frame Valid

The synchronization signal FVAL is used to indicate the frame transfer phase. When rising, it indicates the start of a new frame transfer phase. When falling, it indicates the end of the frame transfer.

Every frame includes a certain number of lines. All lines transferred during this time slot are valid.

LVAL - Line Valid

The synchronization signal LVAL is used to indicate a line transfer phase within the current frame transfer. When rising, it indicates the start of a new line transfer phase. When falling, it indicates the end of the line transfer phase.

The LVAL signal is valid only while FVAL is high.

DVAL - Data Valid

The synchronization signal DVAL is used to indicate a valid pixel within the current line transfer phase. The DVAL bit is high for the transfer of one pixel. When high, it indicates that the pixel is valid. If low, the pixel must be ignored. A pixel is only valid, if all of the FVAL, LVAL and DVAL signals are high.

To make use of the DVAL signal, the frame grabber in use must be able to process it.

Sequential overview

After the start of the data transfer, frames and lines are transferred using the sequence described below.

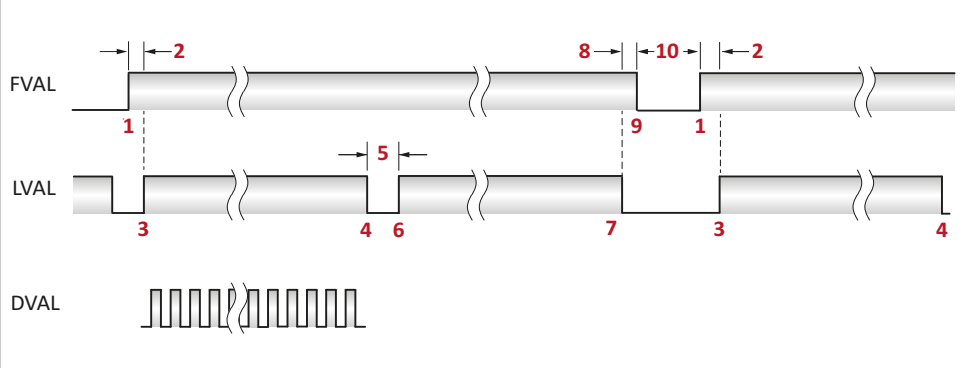

Figure 47: Camera Link data transfer

1. The FVAL signal is set to ***high*** and indicates the start of a new frame transfer.
2. A gap occurs before the LVAL signal is set to ***high***.
   The length of this gap is controlled by the `ClMinFValToLValDelay` parameter and is given in camera clock cycles.
   The effective length of this gap is equal to either the value of `ClMinFValToLValDelay`, or (3 × `Width` + 32) clock cycles, whatever is the larger.
3. The LVAL signal is set to ***high*** and indicates the start of a new line transfer.
4. The LVAL signal switches back to ***Low*** and indicates transfer of the line is complete.
5. A gap occurs between two line transfers.
   The length of this gap is controlled by the `ClLValToLValDelay` parameter and is given in clock cycles.

   If the value of the `ClLValToLValDelay` parameter is set too small, the camera may not be able to provide the data fast enough. If this happens, the camera automatically extends the gap. This may result in line gaps of unequal lengths.

6. The LVAL signal is set to ***high*** and indicates the start of a new line transfer.
7. The LVAL signal switches back to ***Low*** and indicates transfer of the line is complete.
   If this was not the last line, go to #5.
   If this was the last line, go to #8.
8. A gap occurs after the last line transfer within a frame.
   The length of this gap is controlled by the `ClLValToFVal` parameter and is given in clock cycles.
9. FVAL switches back to ***Low*** and indicates the transfer of the frame is complete.
10. A gap occurs between two frame transfers.

The Length of this gap is controlled by the `ClMinFValToFVal` parameter and is given in clock cycles.

Note that this is the minimum delay that must be kept between two frames.

Go to #1.

The gaps between the FVAL and the LVAL signals can be adjusted as displayed in Figure 48 . The lengths of the gaps can be adjusted using the features listed in Table 119 .

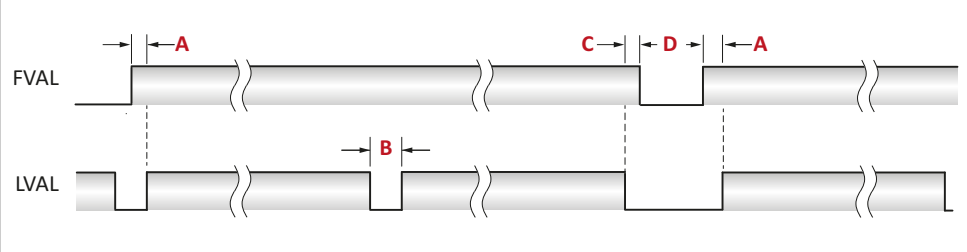

Figure 48: Gaps usable for Goldeye CL timing control

Description		Length [clock cycles]		
		Min.	**Default**	**Max.**
A	Minimum gap between the rising edges of the FVAL signal and the first line's LVAL signal. The real delay may be higher than the value specified with this feature. Feature name: `ClMinFvalToLvalDelay`	*0*	32	*1023*
B	Width of the line gap. Feature name: `ClLvalToLvalDelay`	*1*	64	*1024*
C	Gap between the falling edges of the last lines' LVAL signal and the FVAL signal. Feature name: `ClLvalToFvalDelay`	*0*	32	*1024*
D	Minimum gap from one falling edge to the next rising edge of the FVAL signal. The real value may be higher than the value specified by this feature. Feature name: `ClMinFvalToFvalDelay`	*1*	32	*1024*

Table 119: Gaps usable for Goldeye CL timing control

Starting the acquisition automatically

To start the acquisition automatically after the camera powers up, follow the steps lined out below:

Step 1: Go to the `AcquisitionAutoStartMode` feature and set it to *`On`*.

Step 2: Select a user set, using the `UserSetSelector` feature.

Step 3: Save the current camera parameters in the selected user set, using the `UserSetSave` feature.

Step 4: To set the selected user set as default user set that will be active after the next start of the camera, activate it using the `UserSetLoad` feature.

Result: Now the camera will start the acquisition automatically after the next power-up.

Triggering

This chapter includes:

- A general description of trigger features and rules such as timing diagram and definitions.
- I/O connectors and pin assignment
- Schematic input/output block diagrams

I/O connectors and pin assignment

Caution: Avoid electrostatic discharge.

Electrostatic sensitive device.

To prevent equipment damage, use proper grounding techniques.

Avoid electromagnetic interferences.

For all power and interface connections use only shielded cables.

Connectors

Goldeye model	Connector	Usage
G-008 TEC1, CL-008 TEC1	Hirose 12-pin	External power and I/O
G-032 TEC1, CL-032 TEC1	Hirose 12-pin	External power and I/O
G-033 TEC1, CL-033 TEC1	Hirose 12-pin	External power and I/O
G-033 TECless, CL-033 TECless	Hirose 12-pin	External power and I/O

Table 120: Hirose connectors used with Goldeye standard models

Goldeye model	Connector	Usage
G-008 Cool TEC1, CL-008 Cool TEC1	Hirose 12-pin	I/O
	Hirose 4-pin	External power
G-032 Cool TEC2, CL-032 Cool TEC2	Hirose 12-pin	I/O
	Hirose 4-pin	External power

Table 121: Hirose connectors used with Goldeye Cool models

I/O types

Non-isolated I/Os:

- One non-isolated line-in (3.3 V LVTTL, 5 V TTL tolerated, see Table 124 on page 174)
- One non-isolated line-out (5 V TTL)
- (Camera Link only) Four non-isolated LVDS inputs (CC ports)

Opto-isolated I/Os:

- One opto-isolated line-in
- Two opto-isolated line-out
- Maximum isolated power voltage is 30 V
- Line-in voltages:
  - V_{in}(low) = 0.0 V to 1.0 V
  - V_{in}(high) = 3.0 V to 24.0 V

Quick overview: trigger cables with 12-pin Hirose connector

Cable side Hirose connectors (without cable) and I/O cables with Hirose connector are available for purchase from Allied Vision.

Description	Product code
Trigger cable In1 BNC LVTTL with Hirose 12-pin connector, 2 m	1068908
Trigger cable In1 BNC LVTTL with Hirose 12-pin connector, 5 m	1068909

Table 122: Available trigger cables with Hirose 12-pin connector

If you use other I/O cables, the maximum length of the I/O cable must not exceed 30 m.

Pin assignment

Hirose 12-pin connector

	Quick links
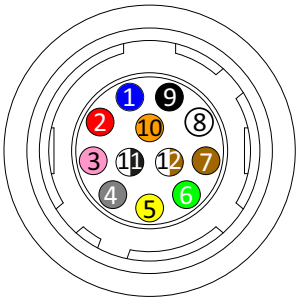	External GND and external power(pin 1 and pin 2) for industrial design models
	RxD RS232 and TxD RS232 (pin 8, pin 9)
	Isolated out power (pin 10)
	In 1- non-isolated (pin 4)
	In 2- opto-isolated (pin 11)
	Out 1- non-isolated (pin 6)
	Out 2 (pin 12) and Out 3 (pin 5)- opto-isolated

Table 123: Overview of I/O connections of the 12 pin Hirose connector

Pin	Color code	Signal	I/O	Level	Description
1	Blue	External GND	In/ Out	GND for RS232 and external power	Ext. ground for RS232, TTL I/Os (and ext. power)
2	Red	External Power [1]	In	10.8 V to 30.0 VDC	Power supply [1]
3	Pink	Video Type Auto Iris Out	Out	(Not applicable)	Video iris
4	Gray	In 1	In	V_{in} (low) 0.0 V to 0.8 V V_{in} (high) 2.0 V to 5.0 V	Input 1 non-isolated (LineIn1)
5	Yellow	Out 3	Out	Open emitter, max. 20 mA	Output 3 opto-isolated (LineOut3)
6	Green	Out 1	Out	TTL (5 V, max. 20 mA)	Output 1 non-isolated (LineOut1)
7	Brown	Isolated In GND	In	Common GND for opto-isolated inputs	Camera common input ground (In GND)
8	White	RxD RS232	In	RS232	Terminal receive data
9	Black	TxD RS232	Out	RS232	Terminal transmit data
10	Orange	Isolated Out Power	In	Common supply voltage for outputs max. 30 VDC	External power input for digital outputs (Out V_{CC})
11	White/Black	In 2	In	V_{in} (low) 0.0 V to 1.0 V V_{in} (high) 3.0 V to 24.0 V	Input 2 opto-isolated (LineIn2)
12	White/Brown	Out 2	Out	Open emitter, max. 20 mA	Output 2 opto-isolated (LineOut2)
	[1] With Cool models, external power is supplied via the 4-pin Hirose connector only, pin 2 of the 12-pin connector is not connected.				

Table 124: Pin assignment for the 12 pin Hirose connector

Hirose 4-pin connector

	Quick links
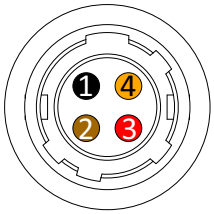	External GND and external power(pin 1 to pin 4) for Cool models

Table 125: Overview of connections of the 4 pin Hirose connector

Pin	Color code		Signal	I/O	Level	Description
1	Black		External Power	In	10.8 V to 30.0 VDC	External power
2	Brown		External Power	In	10.8 V to 30.0 VDC	External power
3	Red		External GND	In	GND external power	External ground for external power
4	Orange		External GND	In	GND external power	External ground for external power

Table 126: Pin assignment for the 4 pin Hirose connector.

I/O definitions

External GND and external power

Goldeye standard models

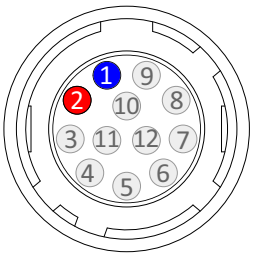

Use pins 1 and 2 of the Hirose 12-pin connector to power the camera:

- G/CL-008 TEC1
- G/CL-032 TEC1
- G/CL-033 TEC1, G/CL-033 TECless

Goldeye Cool models

Use pin 1 to pin 4 of the Hirose 4-pin connector to supply the camera with power:

- G/CL-008 Cool TEC1
- G/CL-032 Cool TEC2

For more information on power supply refer to Power supply on page 155.

Observe the input voltage.

Exceeding the 30 V input voltage can permanently damage the camera.

RxD RS232 and TxD RS232 (pin 8, pin 9)

These signals are RS232 compatible. These signals are not optically isolated. Connect RS232 ground to Camera GND to complete the RS232 circuit. Communication takes place at a bandwidth of up to 115,200 bits per second (customer adjustable).

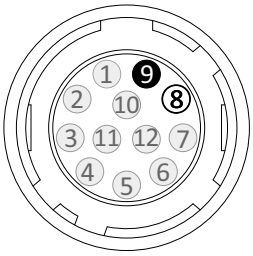

More information on the RS232 interface:

For complete RS232 description and usage on GigE cameras, see the application note RS232 Port Explained on the Allied Vision knowledge base webpage:

www.alliedvision.com/en/support/technical-papers-knowledge-base.html

Isolated out power (pin 10)

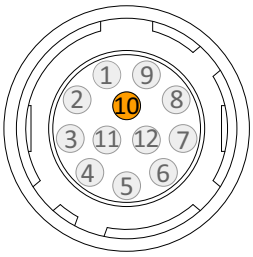

Connect the **Isolated Out Power** to a power source for isolated signals **Out 2** and **Out 3**. The voltage requirement is 3 to 30 VDC. The current requirement for this supply is a function of the optical insulator collector current and the number of outputs used in the system. **Isolated Out Power** wiring should be physically close to **Out 2** / **Out 3** wiring to prevent parasitic coupling.

Input signals

Input signals allow the camera to be synchronized to an external event. The camera can be programmed to trigger on the rising edge, falling edge, both edges, or level of the signal. The camera can also be programmed to capture an image at some programmable delay time after the trigger event.

In 1 - non-isolated (pin 4)

In 1 is not electrically isolated and can be used when environmental noise is inconsequential, and a faster trigger response is required. To complete the trigger circuit, connect trigger ground to External GND.

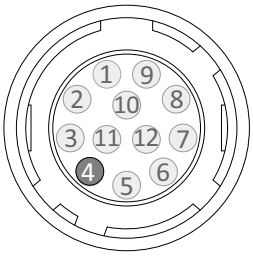

Trigger signal	Input current
Required trigger signal:	LVTTL (3.3 V), TTL (5 V) tolerated
Input current to be expected in TTL mode:	3 mA
Input current to be expected in LVTTL mode:	0.3 mA

Table 127: Input 1 - trigger signal and input current

In 2 - opto-isolated (pin 11)

In 2 is optically isolated and can be used in electrically noisy environments to prevent false trigger events. To complete the trigger circuit, connect trigger ground to **Isolated In GND**. Compared to the non-isolated trigger, **In 2** has a longer propagation time.

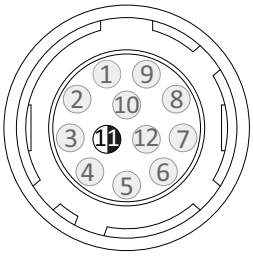

Trigger signal	Input current
Trigger input voltage: V_{in} (low):	0.0 V to 1.0 V
Trigger input voltage: V_{in} (high):	3.0 V to 24.0 V
Input current to be expected:	5 mA

Table 128: Input 2 - trigger signal and input current

Isolated input block diagram

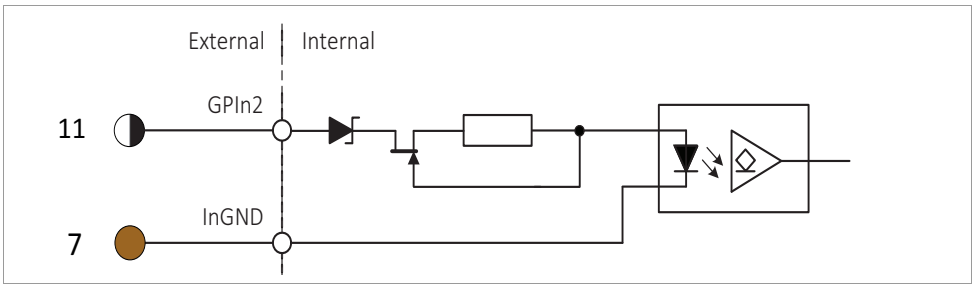

Figure 49: Goldeye G/CL isolated input block diagram

The inputs can be connected directly to the system for voltages up to 24 VDC. An external resistor is not necessary.

Goldeye G/CL isolated input delay and minimum pulse width

The minimum pulse width for all Goldeye G/CL cameras is:

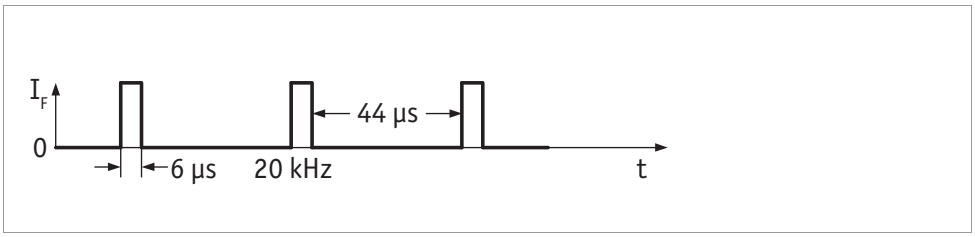

Figure 50: Goldeye G/CL minimum pulse width

Test conditions

The input signal was driven with 3.3 V (LVTTL) and no external additional series resistor was used.

CC1 - CC4 (Camera Link only)

The Camera Link signals CC1- CC4 are LVDS (Low-voltage differential signaling) pairs and are located on the SDR-26 connector. They are exclusively controlled by the frame grabber the camera is connected to. For further information refer to the Camera Link standard.

Output signals

Output signals can be assigned to a variety of internal camera signals via software. They can be configured to active high or active low. The internal camera signals are listed in Table 133 on page 184.

Output signal	Description
Exposing	Indicates when camera is integrating light.
Trigger Ready	Indicates when the camera is ready to accept a trigger signal.
Trigger Input	A relay of the trigger input signal used to “daisy chain” the trigger signal for multiple cameras.
Readout	Valid when the camera is reading out data.
Imaging	Valid when the camera is exposing or reading out.
Strobe	Programmable pulse based on one of the events listed above.
GPO	User programmable binary output.

Figure 51: Goldeye G/CL internal camera signals

Out 1 - non-isolated (pin 6)

The **Out 1** signal is not electrically isolated and can be used when environmental electrical noise is inconsequential, and faster trigger response is required. Connect signal ground to **External GND** to complete the external circuit.

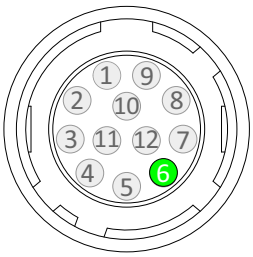

Signal	Output
Output signal	TTL (5 V)
Maximum output current	20 mA

Table 129: Output 1 output signal and maximum current

Possible low output voltage

Output voltage may drop **down to 3.5 V** under full load.

Out 2 (pin 12) and Out 3 (pin 5) - opto-isolated

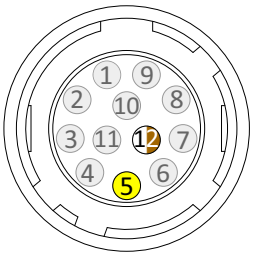

Out 2 and **Out 3** signals are optically isolated and require the user to provide a voltage level at **Isolated Out Power**.

An example of the functional circuit is indicated in Table 52 on page 181.

Signal	Output
Possible voltage source $OutV_{CC}$ Range	3 V to 30 V
Maximum output current per output	20 mA

Table 130: Output 2 / Output 3 voltage source and current per channel

Possible low output voltage

Output voltage may drop **by 2.5 V** under full load.

The opto-isolated inputs can be connected directly to the system for voltages up to 24 VDC. An external resistor is not necessary.

Isolated output block diagram

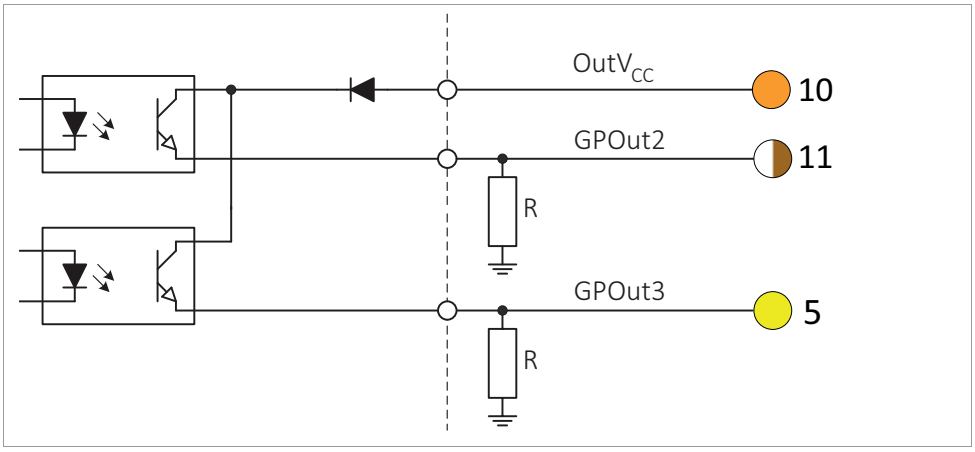

Figure 52: Goldeye G/CL isolated output block diagram

$OutV_{CC}$	Resistor value
5 V	1.0 kΩ
12 V	2.4 kΩ
24 V	4.7 kΩ

Table 131: $OutV_{CC}$ and value of the external resistor

Goldeye G/CL isolated output delay

The output switching times displayed in Figure 53 on page 182 are applicable to opto-coupled outputs only.

Note that higher external resistor values increase the time values that are listed in *Table 132* .

Parameter	Value
Delay time	$t_d \approx 1$ µs
Rise time	$t_r \approx 1$ µs
Turn-on time	$t_{on} = t_d + t_r \approx 2$µs
Storage time	$t_s \approx 26$ µs
Fall time	$t_f \approx 21$ µs
Turn-off time	$t_{off} = t_s + t_f \approx 47$ µs

Table 132: Output parameters and values

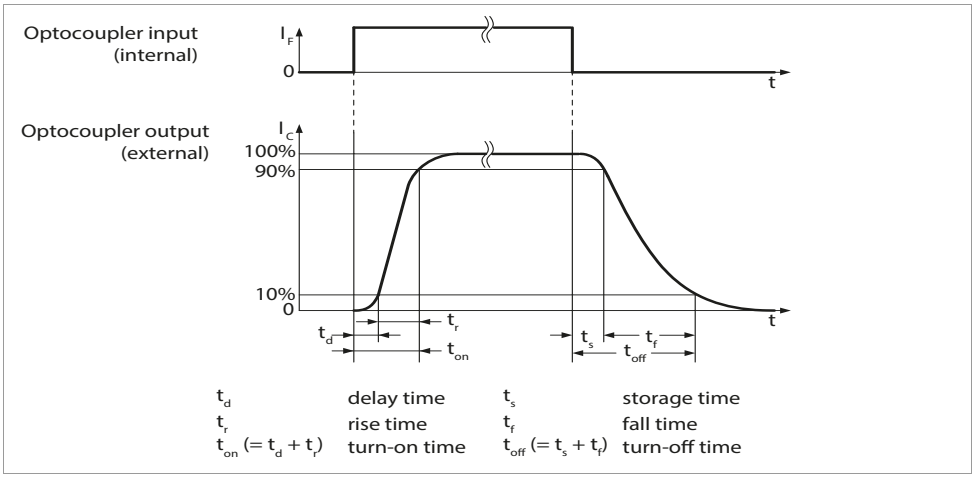

Figure 53: Goldeye G/CL output switching times

Cycle delay:

The cycle delay for the Goldeye is as follows:

- $t_{pdLH} < 3.5\ \mu s$
- $t_{pdHL} < 30\ \mu s$

For this reason, we recommend triggering on the rising edge. This ensures the fastest possible reaction time.

Test conditions

- External 2.4 kOhm resistor to GND
- Power input for output ports set to 12 V

Control signals

It is possible to configure the inputs and outputs of the camera, using software. The different modes are described on the following pages.

Inputs

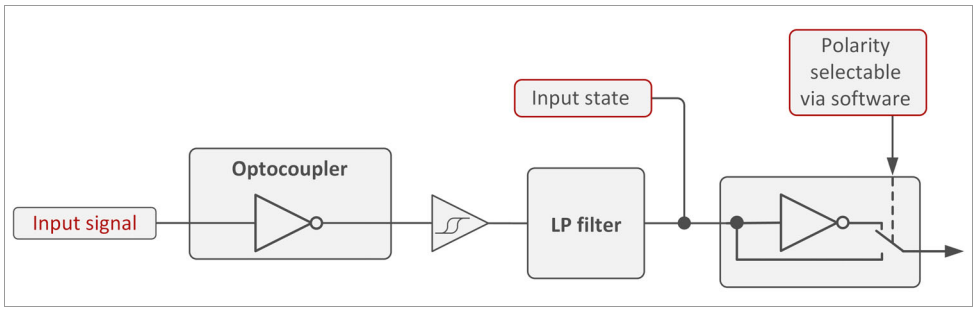

Figure 54: Goldeye G/CL input signal block diagram

I/O pin control

More details on input and output signals:

All input and output signals running over the camera I/O connector are controlled by the I/O strobe commands. For more details see the Allied Vision Goldeye G/CL Features Reference on the Allied Vision knowledge base webpage:

www.alliedvision.com/en/support/technical-documentation/goldeye-gcl-documentation.html

Outputs

It is possible to configure the output signals, using software. Each of the signals explained in Table 133 can be routed to an output signal through a multiplexer. .

Source signal	Description
GPO	Configured to be a general-purpose output, control of which is assigned to LineOutLevels.
AcquisitionTriggerReady	Active when the host application has recognized the camera, and the camera is ready to start acquisition.
FrameTriggerReady	Active when the camera is in a state that accepts the next frame trigger.
FrameTrigger	Active when an image has been initiated to start. This is a camera-internal logic trigger, which is initiated by an external trigger or software trigger event.
Exposing	Active for the duration of sensor exposure.
FrameReadout	Active during frame readout, for example, the transferring of image data from the CCD to camera memory.
Imaging	High when the camera image sensor is either exposing and/or reading out data.
Acquiring	Active during an acquisition stream.
LineIn1	Active when there is an external trigger at LineIn1.
LineIn2	Active when there is an external trigger at LineIn2.
Strobe1	The output signal is controlled according to Strobe1 settings.
CC1	(Camera Link only) active if trigger is detected on CC1. The CC1 output acts the same way all other Goldeye outputs do.
CC2	(Camera Link only) active if trigger is detected on CC2. The CC2 output acts the same way all other Goldeye outputs do.
CC3	(Camera Link only) active if trigger is detected on CC3. The CC3 output acts the same way all other Goldeye outputs do.
CC4	(Camera Link only) active if trigger is detected on CC4. The CC4 output acts the same way all other Goldeye outputs do.

Table 133: Goldeye G/CL - possible sources for output signals

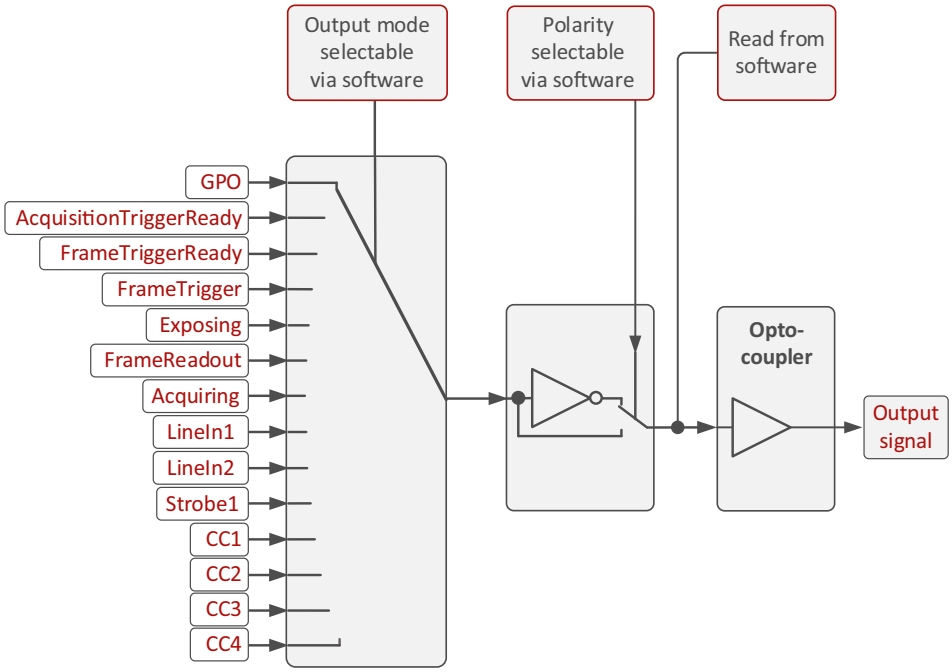

Figure 55: Goldeye G/CL signals output block diagram

Trigger timing diagram

The diagram in Figure 56 explains the trigger concept in general.

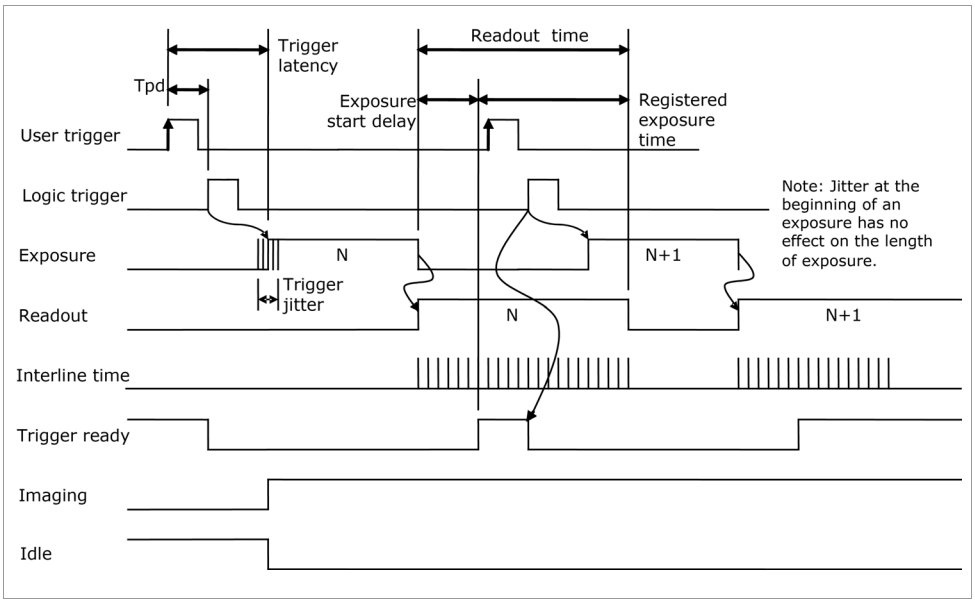

Figure 56: Goldeye G/CL trigger timing diagram

Trigger description for GigE cameras

For trigger descriptions on camera control basis see the Allied Vision GigE Camera and Driver Features on the Allied Vision knowledge base webpage:

www.alliedvision.com/en/support/technical-papers-knowledge-base.html

Notes on triggering

Trigger definitions

Term	Definition
User trigger	Trigger signal applied by the user (hardware trigger, software trigger).
Logic trigger	Trigger signal seen by the camera internal logic (not visible to the user).
Tpd	Propagation delay between the User trigger and the Logic trigger.
Exposure	High when the camera image sensor is integrating light.
Readout	High when the camera image sensor is reading out data.
Trigger latency	Time delay between the user trigger and the start of exposure.
Trigger jitter	Error in the trigger latency time.
Trigger ready	Indicates to the user that the camera is ready to accept the next trigger.
Registered exposure time	Exposure time value currently stored in the camera memory.
Exposure start delay	Registered Exposure Time subtracted from the Readout time. Exposure start delay indicates when the next exposure cycle can begin such that the exposure end after the current Readout.
Interline time	Time between sensor row readout cycles.
Imaging	High when the camera image sensor is either exposing and/or reading out data.
Idle	High if the camera image sensor is not exposing and/or reading out data.

Table 134: Goldeye G/CL trigger definitions

Trigger rules

Minimum user trigger pulse width

The user trigger pulse width should be at least three times the width of the trigger latency.

1. The **end of exposure** always triggers the next Readout.
2. The **end of exposure** must always end after the current Readout.
3. The **start of exposure** must always correspond with the Interline Time if Readout is true.
4. **Exposure start delay** is equal to the Readout time less the Registered Exposure Time.

Triggering during the Idle state

For applications requiring the shortest possible trigger latency and the smallest possible trigger jitter the user trigger signal should be applied when Imaging is false and Idle is true. In this case, trigger latency and trigger jitter can take the values shown in Table 135 .

Trigger latency on LineIn1 (TTL)	0.6 µs (max.)
Trigger latency on LineIn2 (opto-isolated)	3.5 µs (max.)
Trigger jitter on both LineIn1 and LineIn2	1 pixel (max.)

Table 135: Trigger latency and trigger jitter during the idle state

Triggering during the readout state

For applications requiring the fastest triggering cycle time during which the camera image sensor is exposing and reading out simultaneously, then the User trigger signal should be applied as soon as a valid trigger Ready is detected. In this case, trigger latency and trigger jitter can take the values shown in Table 136 .

Trigger latency on LineIn1 (TTL)	1 line (max.) + 0.6 µs (max.)
Trigger latency on LineIn2 (opto-isolated)	1 line (max.) + 3.5 µs (max.)
Trigger jitter on both LineIn1 and LineIn2	1 pixel (max.)

Table 136: Trigger latency and trigger jitter during the readout state

Application notes - Triggering concept for GigE camera (advanced)

For a more detailed description of the trigger concept for advanced users and special scenarios, see the application notes on the Allied Vision knowledge base webpage:

- Triggering concept for Allied Vision GigE cameras
- Using ITR and IWR mode to maximize the frame rate of Goldeye cameras

www.alliedvision.com/en/support/technical-papers-knowledge-base.html

Image data flow

This chapter includes:

- Description of the data processing path of the Goldeye G/CL cameras in block diagrams
- Explanation of the IR-specific image processing features of the Goldeye G/CL firmware
- Listing of all camera control features of the Goldeye G/CL

Image processing chain

The block diagram (Figure 57) illustrates the flow of image data within the camera. The features of the individual modules are described in more detail on the following pages.

Note that, depending on firmware version, not all of the modules and features shown in Figure 57 are available.

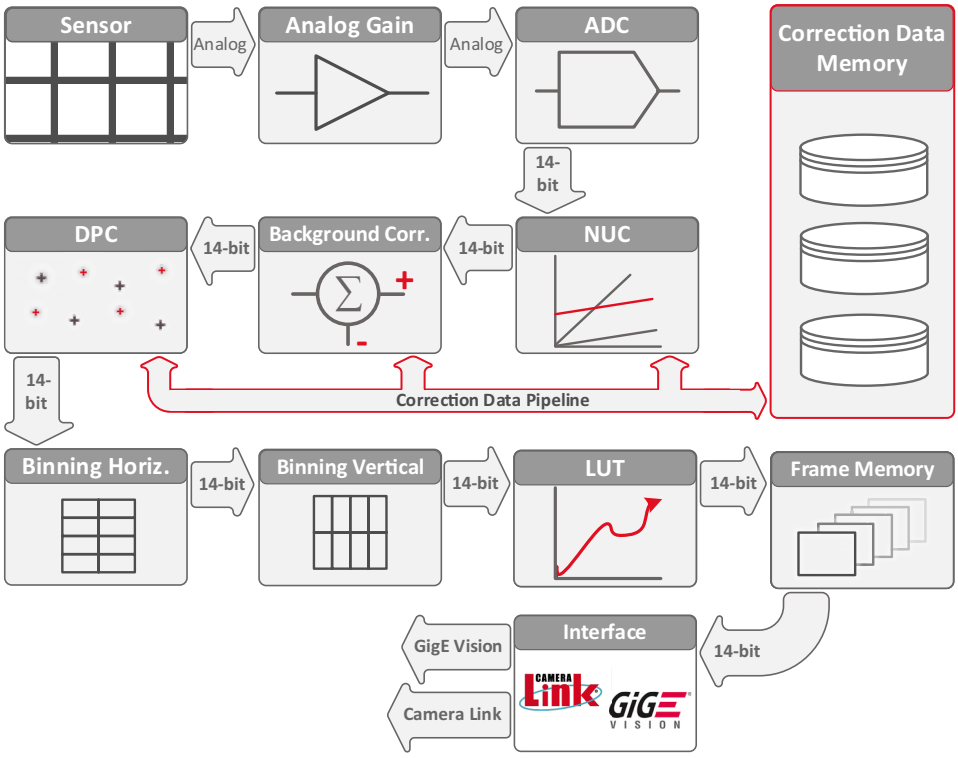

Figure 57: Goldeye G/CL image processing chain

The Goldeye G/CL contains a chain of image processing modules, called the **image processing chain**. The first module (called **Analog Gain**) receives the source signal from the sensor. Each of the subsequent modules receives the output data of the previous module as input.

The behavior of each module is configurable by software via specific features. That way, it is possible to set parameters or operation modes for each module.

Each module passes on the data to the succeeding module. The output of the last module is stored in the frame memory, which in turn passes it on to the GigE or Camera Link interface for output.

GigE features and Camera Link registers:

Find a complete description of features and registers in the Allied Vision Goldeye G/CL Features Reference. It describes the standard and advanced camera controls for Allied Vision Goldeye G and CL cameras as seen from the Allied Vision Vimba Viewer.

To access the document, go to *alliedvision.com* > *Support* > *Technical Documentation* and select *Goldeye G/CL.*

www.alliedvision.com/en/support/technical-documentation/goldeye-gcl-documentation.html

Image corrections

The corrections applied to the image are of special relevance within the Goldeye camera. They are applied by the following modules.

- Non-uniformity correction (NUC)
- Background correction (BC)
- Defect pixel correction (DPC)

The corrections need special correction data that must be provided prior to operating the image processing chain.

Determination and storage of correction data

For each individual camera, specific correction data is determined during the manufacturing process. All necessary correction data is stored within the camera's non-volatile flash memory ex works.

During camera start-up, the available correction data is copied from the flash memory onto the correction data memory for real time access.

From the correction data memory, the correction data is transferred to the individual correction modules. The correction data transfer is synchronized with the transfer of image data from the sensor. A correction module may also write back to the correction data memory, depending on its functionality.

The IR specific image correction modules are described in detail below.

Non-uniformity correction (NUC)

Every pixel of an InGaAs sensor possesses its individual amount of dark signal (dark signal non-uniformity, DSNU) and an individual sensitivity for light (photo response non-uniformity, PRNU). Thus, while exposing, each sensor creates a specific, non-uniform underlying pattern. This pattern can be compensated with help of the non-uniformity correction.

To correct the non-uniformity, correction values for gain and offset of each pixel are determined based on multiple reference images and applied to the actual image. Ideally, after correction no image structure is recognizable.

However, there are various conditions that influence the image quality:

- Analog gain setting
- Sensor temperature
- Exposure time

These conditions need corresponding correction data for best correction quality. Thus, the camera contains several data sets for a range of conditions.

Because each correction data set is applicable under certain conditions only, the relevant conditions are stored with the data set.

An automated data set selection feature keeps track of the conditions. If any of the parameters changes, the most suitable correction data set is selected automatically. No additional user interaction is necessary.

Set to **Continuous**, this function updates the data set selection for every frame.

More information on NUC features:

Find detailed descriptions of the features controlling the NUC and the functionality associated with them in the Goldeye G/CL Features Reference.

www.alliedvision.com/en/support/technical-documentation/goldeye-gcl-documentation.html

Background correction (BC)

The background correction is used as an additional correction, based on actual operating conditions, to optimize the result of the NUC.

The correction data for the NUC is factory-provided and based on specific conditions: exposure time, sensor temperature, and sensor gain setting. If the conditions during camera operation are different, non-uniformity correction does not work at best performance.

To compensate for remaining non-uniformity, the live image is corrected with a previously recorded dark image. This image is subtracted from the precorrected image to reduce the fixed pattern noise.

To adapt the BC to local conditions, customers acquire their own volatile correction image. It is also possible to shift the offset individually, if needed.

More information on BC features:

Find detailed descriptions of the features controlling the BC and the functionality associated with them in the Goldeye G/CL Features Reference.

www.alliedvision.com/en/support/technical-documentation/goldeye-gcl-documentation.html

Defect pixel correction (DPC)

The pixels of InGaAs sensors may show abnormal behavior in one or more of the three characteristics:

- Dark offset
- Photo response
- Dynamic noise

The result is an excessively reduced dynamic range. These pixels are counted as defect pixels.

The value of each defect pixel is replaced by an interpolated value from non-defect neighboring pixels. This way, the image appears without disturbing bright or dark pixels.

More information on DPC features:

Find detailed descriptions of the features controlling the DPC and the functionality associated with them in the Goldeye G/CL Features Reference.

www.alliedvision.com/en/support/technical-documentation/goldeye-gcl-documentation.html

Image processing

Look-up table (LUT)

The use of a look-up table allows any mapping function in the form **output = f(input)** to be applied to the pixel values at runtime.

The factory setting of Goldeye cameras includes eight preloaded LUT files.

- Four pre-configured LUT files are available. Those files are 14-bit LSB aligned and are named from LUT_000 to LUT_003. The pre-configured files are not changeable in user mode.
- Four user-configurable LUT files are available. Those files are empty and are named from LUT_User_000 to LUT_User_003.

To load a Dataset file into the volatile LUT memory

Follow these steps:

1. Select the file to be loaded with `LUTDatasetSelector`
2. Select the target LUT with `LUTSelector`
3. Call the command `LUTDatasetLoad`

The LUT wiil not be loaded if an empty dataset file has been selected.

To avoid temporary invalid image data, it is recommended to do one of the following before executing `LUTDatasetLoad`:

- Stop image acquisition
- Set `LUTEnable` to *`False`*.

To save a LUT from volatile memory to file

Follow these steps:

1. Select the LUT to be saved with `LUTSelector`
2. Select the target file with `LUTDatasetSelector`
3. Call the command `LUTDatasetSave.`

To avoid temporary invalid image data, it is recommended to do one of the following before changing the `LUTValue` at several index positions of a LUT:

- Stop image acquisition
- Set `LUTEnable` to *`False`*.

More on LUT features, and on using the LUT for image processing

The application note Using the Goldeye G/CL LUT for image processing provides a detailed description about using and customizing the Goldeye LUT.

Find more descriptions of the features controlling the LUT and the functionality associated with them in the Goldeye G/CL Features Reference.

www.alliedvision.com/en/support/technical-documentation/goldeye-gcl-documentation.html

Binning

Binning is the summing of charge or gray value of adjacent pixels on a sensor, giving a lower resolution image, but at full region of interest. The image sensitivity is improved due to summed pixel charge / gray value.

In all Goldeye cameras, digital binning is applied after the Background Correction takes place. This approach allows to reduce the background level, using the Background Correction function, for higher binning value settings.

More information on Binning features:

Find detailed descriptions of the features controlling binning and the functionality associated with it in the Goldeye G/CL Features Reference.

www.alliedvision.com/en/support/technical-documentation/goldeye-gcl-documentation.html

Automatic image control

Definitions

To properly explain the working principle of automatic image control, the definition of several special terms is clarified first. Refer also to Figure 58 on page 198.

Accounted pixels

Once the outliers are discarded from the calculation, all pixels holding gray values in the middle of the image histogram constitute the Accounted pixels.

Mean value

The average gray value of all accounted pixels. This means that within the accounted pixels range of the image histogram, the same number of accounted pixels is situated to either side of the mean value.

Minimum and maximum

The smallest and the largest gray value of pixels accepted within the number of accounted pixels.

Outliers

Outliers are defined as the brightest and darkest pixels in an image. Usually they originate from defect pixels of the sensor itself.

Small, very bright, or very dark objects in the observed scene can also create outliers. Because very small objects usually do not carry much useful scene information, they can be treated like outliers as well.

In an image histogram, the outliers show on the far-left side (dark pixels) and on the far-right side (bright pixels).

Eliminating outliers

The calculations of all auto level control features, including the automatic exposure operation, may be influenced by outliers in an unwanted way.

The auto level control settings allow for discarding outliers and thus preventing their undesired impact on the auto level control adjustments.

- To exclude the outliers on the dark side of the histogram (left), use the `AutoModeOutliersDark` feature. To include all dark pixels into the calculations, set the feature to `0`.
- To exclude the outliers on the bright side of the histogram (right), use the `AutoModeOutliersBright` feature. To include all bright pixels into the calculations, set the feature to `0`.

The values for both exclusion areas do not need to be equal.

For all the calculations concerning automatic image control, only the pixels not excluded by the outlier settings are considered.

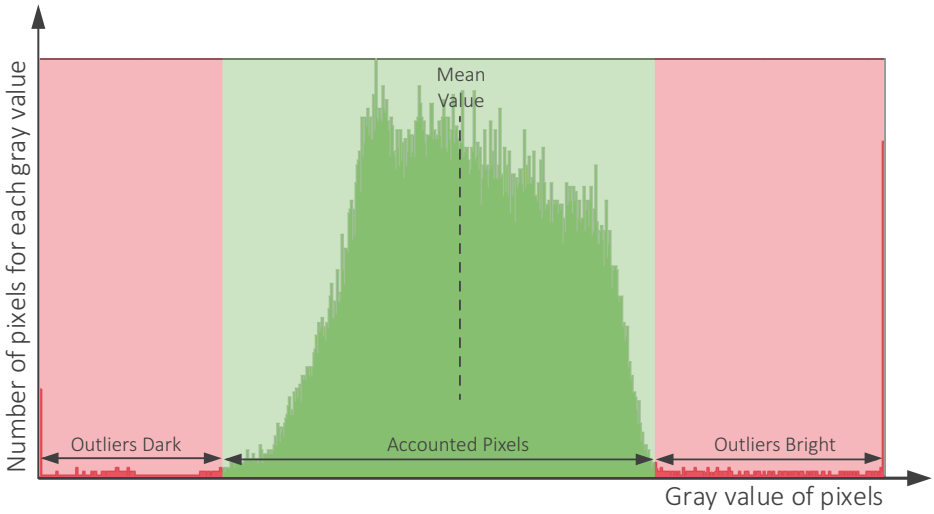

Figure 58: Image histogram - showing the ranges of accounted pixels (green), the ranges of the outliers (red) and the mean value.

Selecting a region of interest

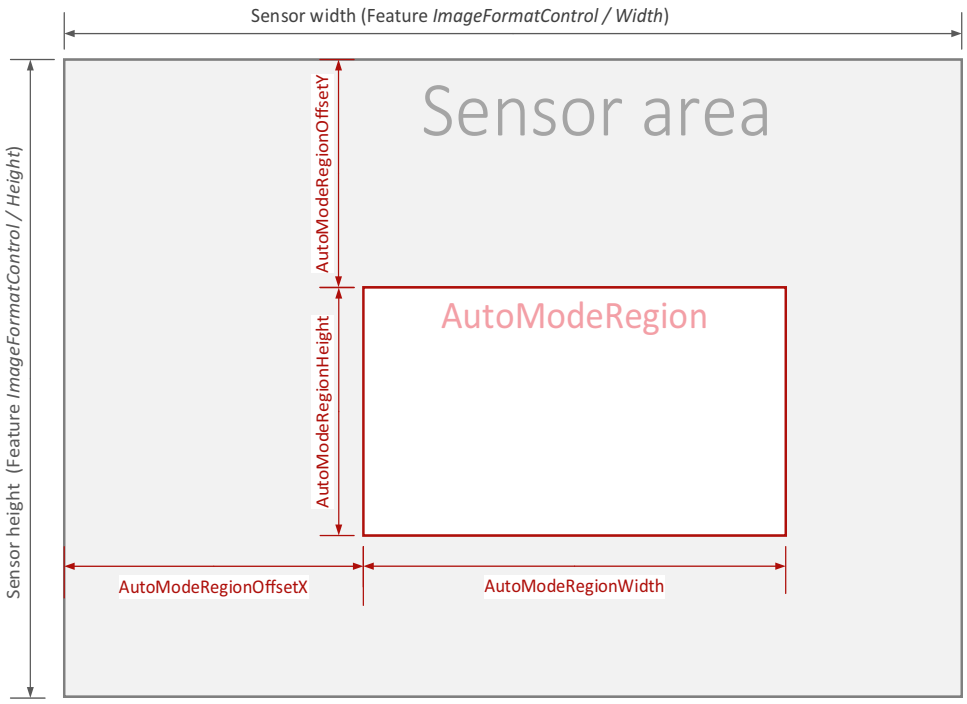

Figure 59: AutoModeRegion features

As for any other auto mode feature, you can use the `AutoModeRegion` feature and its sub-features to define the region of interest (ROI).

You may determine the automatic image control based on the whole sensor area or based on a defined region of interest.

Marking the defined region of interest

It is possible to mark the defined region of interest by dimming the area outside the ROI, so the selected area stands out brighter. To do so, set the feature `AutoModeRegionDimOutside` to *On*.

Figure 60: Example for the effect of AutoModeRegionDimOutside. Left: without dimming applied, right: with dimming applied to the outside area.

More information on automatic image control features:

Find detailed descriptions of the features controlling the automatic exposure and the functionality associated with them in the Goldeye G/CL Features Reference on the Allied Vision website:

www.alliedvision.com/en/support/technical-documentation/goldeye-gcl-documentation.html

Automatic exposure control

The exposure of the Goldeye G/CL can be adjusted automatically by applying the relevant auto exposure settings. The adjustment is based on the present signal values of pixels within the image.

By default, the automatic exposure control is switched off, however, it is possible to have the automatic exposure control run in several ways:

- Run it continuously.
- Run it until the required target value is reached, then stop it.

Selecting an algorithm

To automatically determine the optimal exposure of the sensor, a few statistical values need to be calculated first: a mean (average) value, minimum and maximum

values. These values are calculated with the help of the histogram of the last captured image.

The camera provides two different behaviors to control auto exposure. Use the settings of the `ExposureAutoAlg` feature to select the desired behavior.

Operating the automatic exposure control based on the Mean value

Set the `ExposureAutoAlg` feature to *`Mean`*, and set the `ExposureAutoTarget` feature to the desired value.

In this case the automatic exposure control loop is aimed at keeping the mean value of the image histogram equal to the value set by `ExposureAutoTarget`.

The value for `ExposureAutoTarget` needs to be specified in percentage from the full dynamic range, including the outliers' areas. Higher values of `ExposureAutoTarget` will cause longer exposure times, thus result in brighter images, lower values cause shorter exposure times, thus result in darker images.

If this value is set to 40 percent, then 40 percent of all pixels of the image are darker and 60 percent of all pixels of the image are brighter than this value.

Operating the automatic exposure based on the full range of values

Set the `ExposureAutoAlg` feature to *`FitRange`*. The `ExposureAutoTarget` feature has no influence in this case.

In this case the automatic exposure control loop regulates the exposure in such a way that the maximum value of the image histogram is kept close to the upper end of the dynamic range of the camera.

Tolerance

If the automatic exposure is calculated for every frame (`ExposureAuto` = *`Continuous`*), most likely there are minuscule adjustments to be applied to each frame. These adjustments may cause certain, though usually insignificant, variations of the image brightness between consecutive frames.

To prevent these adjustments, the feature `ExposureAutoAdjustTol` can be used.

The exposure is adjusted only if the current regulated value deviates from the ideal target value by more than a given percentage.

Slowing down the auto exposure adjustments

Usually, the automatic exposure adjustments run at full speed. Using the `ExposureAutoRate` feature, you can slow down the automatic exposure adjustments to a fraction of the maximum possible speed. This can be useful for

some applications and sensor settings, to prevent the auto exposure control loop from occurring oscillations.

Automatic contrast control

The contrast of the Goldeye G/CL can be adjusted automatically by applying the relevant auto contrast settings. The adjustment is based on the present signal values of pixels within the image.

By default, the automatic contrast control is switched off, however, it is possible to have the automatic contrast control applied in several ways:

- Apply it to the whole image.
- Apply it to a defined region of interest. To apply the automatic contrast to a region of interest, use the `AutoModeRegion` features to define the area.

Figure 61: Left: auto contrast applied to ROI, right: auto contrast applied to the whole image.

Controlling the intensity of contrast

Using the `ContrastAutoIntensity` features, it is possible to adjust the intensity of contrast applied. Those features represent an upper and lower threshold of contrast intensity. In combination, they act as follows:

- If both features are set to higher values, the affected area of the image turns brighter.
- If both features are set to lower values, the affected area of the image turns darker.
- If the difference between the set values for both features increases, contrast intensity increases (the black and white spots within the affected area are increasing in number).

- If the difference between the set values for both images decreases, contrast intensity decreases (the gray spots within the affected area are increasing in number).
- If the values for both features are reversed, so that `ContrastAutoIntensity-Max` is set to a value lower than the value of `ContrastAutoIntensityMin`, than the affected area of the image turns into its negative.

Figure 62: Left: Auto contrast applied to a region of interest in the usual way, right: auto contrast with the ContrastAutoIntensity values reversed.

Other image controls

Frame memory

Goldeye cameras capture and transmit each image in consecutive steps. The image is taken, read out from the sensor, digitized, and transmitted to the host computer over the connection used, either Camera Link or Gigabit Ethernet.

For buffering the frames before transmission, a certain amount of RAM is available. The number of frames in the frame memory depends on the defined ROI and the pixel format. Table 137 shows the memory size and the number of frames (StreamHoldCapacity) that can be stored by each model.

Model	Memory size and frames stored	Pixel format and resolution
G/CL-008	256 MB memory: 1524 frames	Mono 14, full resolution
G/CL-032	256 MB memory: 397 frames	Mono 14, full resolution
G/CL-033	256 MB memory: 392 frames	Mono 14, full resolution

Table 137: Typical image memory size

Trigger-induced distortion correction (TIDC)

Background

The trigger-induced distortion (TID) is an image artefact that originates from an influence of the external trigger. The TID occurs only if the two following conditions are met:

- The camera runs in IWR mode.
- The time between the readout of two consecutive frames is smaller than the sum of readout time and exposure time.

Application note: Using ITR and IWR mode

For details how to use ITR and IWR mode in Goldeye Cameras an application note Using ITR and IWR mode to maximize the frame rate of Goldeye Cameras is available online:

www.alliedvision.com/en/support/technical-documentation/goldeye-gcl-documentation.html

The TID can cause a vertical line glitch and a horizontal step in brightness. The magnitude of both depends on the camera model and the selected `SensorGain`.

Controlling the trigger-induced distortion

You can control both artefacts by the `TIDC_Mode` feature. It allows to correct both distortions at the same time, or separately. The correction for both distortions is switched on by default. You find the feature under `DeviceControl` > `SensorBoardSettings` > `TriggerInducedDistortionCorrection`.

For technical reasons the line glitch correction is disabled or enabled automatically depending on the image width. For details see Table 138.

	G/CL-008	G/CL-032	G/CL-033
When **decreasing** image width, the line glitch correction is **disabled** from this ROI width on:	152	302	288
When **increasing** image width, the line glitch correction is **enabled** from this ROI width on:	154	304	290

Table 138: Activation and deactivation of the TIDC depending on ROI width

Available camera controls

GigE and CL features reference:

For detailed information on camera controls, read the Goldeye G/CL Features Reference. It describes the standard and advanced camera controls as seen from the Allied Vision Vimba Viewer or GenICam compliant third-party software solutions.

The document is available on the Allied Vision knowledge base web page:

www.alliedvision.com/en/support/technical-documentation/goldeye-gcl-documentation.html

Use the Vimba SDK

To display the features of any Goldeye model, Allied Vision recommends using the Allied Vision Vimba Viewer.

Temperature control

This chapter includes:

Information about the principle and functionalities of temperature management and sensor cooling of the Goldeye G/CL.

Burns to the skin possible if camera housing is hot.
The camera housing may heat up during operation. Touching the camera with bare hands may lead to injuries.

Wear protective gloves when touching a heated-up camera during operation. Also, use proper heat dissipation methods to keep the camera as cool as possible.

Influence of temperature on the sensor

During operation, power consumed and dissipated by the internal electronic components causes the interior and case of the camera to heat up.

The InGaAs sensor is affected by temperature in two ways:

1. Absolute level of sensor temperature

   An increase in sensor temperature has a negative impact on the image quality of the InGaAs sensor (FPA), for several reasons.

   - An increased sensor temperature increases the dark current of the FPA's photodiodes, thus decreasing the dynamic range of the camera. As a rule of thumb, a temperature increase of 8 Kelvin doubles the dark current. The dark current produces additional offset and noise, especially at longer exposure times, which causes a decrease in image contrast.
   - The spectral sensitivity may change: a difference in temperature may cause the sensitivity curve to drift or to become slightly narrower.
   - Certain components of the InGaAs sensor are prone to temperature drift. A drop in temperature causes a shift of the spectral sensitivity of 25 nm toward the lower wavelengths.
2. Fluctuation of sensor temperature

   If the temperature influence on the sensor remains constant, this ensures constantly high image quality. To achieve this, the temperature of the sensor is stabilized at one of several defined setpoints.

   For the Goldeye stabilized and cooled models, three or four setpoints are defined, depending on the camera model.

To ensure a consistently optimum image quality, the influence of temperature change needs to be minimized. Two measures are taken to achieve this:

- Temperature control of the sensor
- Neutralization of the temperature influence

The ways of temperature control that are realized with Goldeye cameras are described in detail in this chapter.

Control of the sensor temperature

Warm-up period

After switching on the camera, the TEC stabilizes the sensor temperature at the default setpoint, if possible. Except for TECless models, optimal image quality is reached within one minute.

G/CL-008 models are also able to heat up the sensor to any temperature within the operating temperature range.

A red flashing temperature status LED indicates the warm-up period.
A steady green temperature status LED indicates the **Stable** temperature state.

Use a heat sink to reduce camera temperature

To improve the cooling capability of the Goldeye stabilized and TECless models, a heat sink set is available that can be mounted to the camera by the customer. Up to four heat sinks can be fitted to one camera.

The heat sink set is available from Allied Vision, product code 1068300.

Application note: Usage of Heat Sinks with Goldeye Cameras

This application note explains the handling of heat sinks with Goldeye cameras and lists additional methods to improve camera cooling.

www.alliedvision.com/en/support/technical-documentation/goldeye-gcl-documentation.html

Temperature stabilization and active cooling

The temperature-stabilized Goldeye models are equipped with a single-stage thermo-electric cooling (TEC1) to keep the sensor at a stable temperature that is as low as possible.

The specially designed Goldeye housing dissipates the heat build-up inside the camera and radiates the heat into the environment

The two-stage thermo-electric cooling (TEC2) allows to operate the sensor at a temperature well below ambient temperature. This allows for keeping a higher image quality even with longer exposure times. However, with low sensor temperatures and a larger difference to ambient temperatures, condensation on the sensor is likely to occur. To avoid condensation, every TEC2-cooled sensor is placed inside a nitrogen-filled chamber.

In addition to temperature stabilization, Goldeye Cool cameras are equipped with a fan to actively dissipate the heat that builds up internally. Note that the housing

size design is independent from the implemented thermo-electric cooling. A Cool model does not necessarily have a two-stage TEC.

See Neutralization of the temperature influence on page 212 for a detailed explanation.

Passive camera cooling

The Goldeye TECless models provide no active temperature stabilization for the sensor. These models are especially suitable for environments with a low and stable ambient temperature, or in application scenarios where the influence of temperature on image quality is limited, for example at low exposure times of less than 10 ms.

Recommended environment for Goldeye TECless

The Goldeye TECless models are not equipped with a TEC element, hence the camera does not possess temperature setpoints and cannot stabilize the sensor temperature. Therefore, TECless models are recommended to be run in an environment with stable temperature and humidity.

Their non-uniformity correction sets are calibrated for a sensor temperature of +45 °C, because this is the sensor temperature that most likely is to be expected when the camera is operated at an ambient temperature of 23 °C and a relative humidity of 40 percent.

Additional heating of the G/CL-008 models

The TEC1 element of a camera usually has only the ability to cool the sensor. In addition to that, the heating functionality of the G/CL-008 models also enables the TEC1 element to heat the sensor. This ability has the following advantages:

- The camera can operate at a sensor temperature that is higher than the ambient or case temperature.
- When used for low-temperature applications, if the ambient temperature is far below +20 °C, or if the default temperature setpoint has been set high above the ambient temperature, the warm-up period is considerably shortened. Even in ambient temperatures below 0 °C, the camera reaches a stable temperature within one minute.
- The heating capability prevents any variation of the sensitivity curve caused by fluctuation of temperature.

Activating the heating functionality of the G-008

After activating the heating functionality of the G-008, switching down to a setpoint below the selected setpoint is disabled. The ability to switch to a higher setpoint depends on the `SensorTemperatureSetpointMode` feature:

- if set to *`Auto`*, the G-008 is able to switch to a higher setpoint, if it exists.
- if set to *`Manual`*, the G-008 is not able to switch to any other setpoint.

To activate the heating functionality of the G-008, follow these steps:

Step 1: Set the `SensorTemperatureTargetSetpoint` feature to the desired target setpoint.

Step 2: Set the `SensorTemperatureControlMode` feature to *`TemperatureControlTarget`*.

Activating the heating functionality of the CL-008

After activating the heating functionality of the CL-008, switching down to a setpoint below the selected setpoint is disabled. The ability to switch to a higher setpoint, depends on the `RegSensorTemperatureSetpointMode` register:

- if set to *`Auto`*, the CL-008 is able to switch to a higher setpoint, if it exists.
- if set to *`Manual`*, the CL-008 is not able to switch to any other setpoint.

To activate the heating functionality of the CL-008, follow these steps:

Step 1: Set the `RegSensorTemperatureTargetSetpoint` register to the desired target setpoint.

Step 2: Set the `RegSensorTemperatureControlMode` register to *`TemperatureControlTarget`*.

Reduce power consumption of the camera

Reducing the camera's operating temperature can reduce its typical power consumption significantly for any given temperature setpoint.

The TEC works more efficiently if the temperature difference between the cool side and the warm side of the TEC is decreased.

Goldeye Cool variants: Do not cover the fan outlet

Always ensure that a free flow of air from the fan outlet on the camera top is possible.

Obstructing the air flow may result in an unexpected shutdown of the camera.

Neutralization of the temperature influence

To control the temperature influence on the non-uniformity, the TEC element keeps the sensor temperature at predefined setpoints, preferably the default setpoint.

Temperature setpoints

A set of correction data is applied to the output signal. This correction data set is predetermined for each camera individually and is optimized for the default temperature setpoint. The correction data set is uploaded into the camera during manufacturing.

Model	Setpoint 1	Setpoint 2	Setpoint 3	Setpoint 4
CL-008 TEC1	+20 °C [1]	(Default) +25 °C	+35 °C	+50 °C
CL-008 Cool TEC1	-5 °C	(Default) +5 °C	+10 °C	+20 °C
CL-032 TEC1	+5 °C	(Default) +20 °C	+35 °C	+50 °C
CL-032 Cool TEC2	(Default) -20 °C	-5 °C	+10 °C	(n/a)
CL-033 TEC1	+5 °C	(Default) +20 °C	+35 °C	+50 °C
CL-033 TECless	(Not applicable to TECless models.)			
G-008 TEC1	+20 °C [1]	(Default) +25 °C	+35 °C	+50 °C
G-008 Cool TEC1	-5 °C	(Default) +5 °C	+10 °C	+20 °C
G-032 TEC1	+5 °C	(Default) +20 °C	+35 °C	+50 °C
G-032 Cool TEC2	(Default) -20 °C	-5 °C	+10 °C	(n/a)
G-033 TEC1	+5 °C	(Default) +20 °C	+35 °C	+50 °C
G-033 TECless	(Not applicable to TECless models.)			

[1] The first temperature setpoint may be set lower than +20 °C. However, if the sensor temperature is lower than the ambient temperature, especially in humid environments, condensation may occur.

Table 139: Defined temperature setpoints for Goldeye cameras

Achievable temperature difference

The cooling power and heat dissipation capability of the Goldeye is limited. Therefore, the temperature difference (ΔT) achievable by the TEC is limited as well. However, the TEC is capable of achieving a minimum ΔT in all situations. Table 140 displays the achievable ΔT maintained, and the power consumption necessary to achieve that, for each Goldeye TEC model.

The realistically achievable ΔT depends on the environmental conditions. It also depends on the Peltier element and possible heat sinks and heat sources. Heat sources are in particular the camera electronics and the Peltier element itself.

Due to changing environmental conditions, it is not always necessary for the TEC element to maintain the maximum achievable ΔT. On the other hand, particular environmental conditions allow the TEC element to achieve an even higher ΔT.

Note also that the TEC element cools the sensor but dissipates the removed heat into the camera. Therefore, we can indicate a maximum power at the TEC element that removes the heat from the camera under normal operating conditions. Above that threshold (at more TEC power) the camera overheats due to the power consumption of the TEC element. The value is optimally selected in a critical range.

Model	ΔT achievable between case and FPA	Max power to reach ΔT
CL-008 TEC1	20 K	< 5.5 W
CL-008 Cool TEC 1	30 K	< 5.5 W
CL-032 TEC1	30 K	< 5.5 W
CL-032 Cool TEC2	60 K	< 12 W
CL-033 TEC1	25 K	< 4 W
G-008 TEC1	20 K	< 5.5 W
G-008 Cool TEC1	30 K	< 5.5 W
G-032 TEC1	30 K	< 5.5 W
G-032 Cool TEC2	60 K	< 12 W
G-033 TEC1	25 K	< 4 W

Table 140: Cooling limits for Goldeye TEC1 and TEC2 models

Temperature measurement

To control and regulate the internal camera temperature, three temperature sensors are available within the camera. Use the `DeviceTemperatureSelector` feature to select a temperature sensor, as listed in Table 141. The temperature of the selected sensor is displayed with the `DeviceTemperature` feature.

Possible values	Description
`Sensor`	(Default) Temperature sensor beside the camera sensor.
`Sensorboard`	Temperature sensor on the sensor board.
`Mainboard`	Temperature sensor on the main board.

Table 141: DeviceTemperatureSelector values

Switching temperature setpoints

Only the sensor board is switched off

If the internal temperature exceeds the Alert limit, only the sensor and the cooling is shut down.

The camera is not powered down.

You may bring back the camera to normal operation after it is cooled down sufficiently.

To do so, switch the power supply off and switch it on again.

The Goldeye temperature control allows to switch between setpoints manually or automatically.

If set to *Auto*, the TEC switches up or down to the next setpoint, based on the temperature inside the camera. Note that the TEC does not switch up or down immediately after the next setpoint is reached. The switch only takes place when the temperature has exceeded the setpoint by a few degrees.

TECless models do not switch setpoints.

Switching to the higher setpoint

After powering up the camera, at first the camera temperature rises. This is due to heat generation inside the camera, and possibly caused by warm ambient temperature. To keep the sensor temperature constant, the TEC keeps it at a predefined temperature setpoint (see Table 139 on page 212).

The TEC keeps the sensor temperature as long as the difference between sensor temperature and case temperature does not exceed the predefined ΔT (see Table 140 on page 213).

If the case temperature keeps rising, the difference between sensor- and case temperature exceeds the predefined ΔT. The temperature control is no longer able to keep the sensor temperature at the current setpoint. The TEC switches up to the next higher setpoint. The existing NUC data, that is optimized for the default setpoint conditions, is still applied at other setpoints.

Example

The Peltier element of the G/CL-033 TEC1 can achieve a ΔT of 25 K. Its default temperature setpoint is set to +20 °C.

If the camera is switched on at an ambient temperature of +8 °C, the TEC cannot cool down the sensor to the default setpoint, because the ambient temperature is below the default setpoint. Thus, the TEC cools down the sensor to setpoint 1, which is at +5 °C. (See Figure 63for an illustration of this example. Note for better

understanding: the case temperature profile is shown in a simplified way that covers the whole temperature range.)

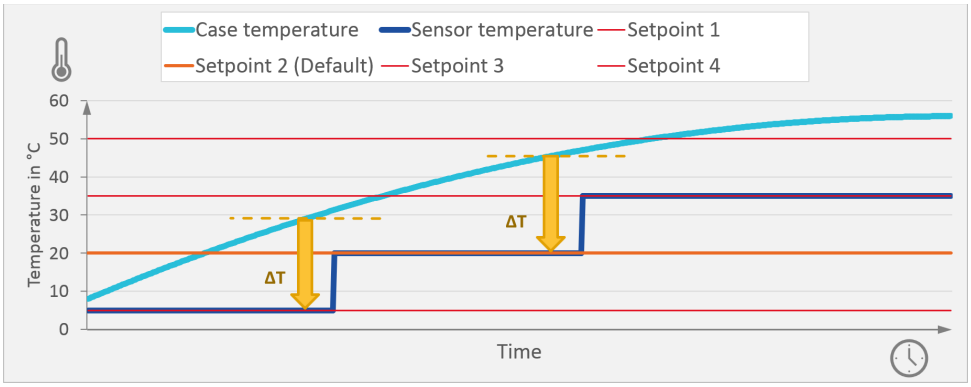

Figure 63: Schematic figure of setpoint switching upwards.

The camera then heats up, and the temperature passes setpoint 2. Later it reaches +30 °C, the point that is 25 K above the current setpoint. If the camera temperature continues to rise, the TEC is no longer able to maintain the set temperature. No later than at this point in time, the TEC switches to the next higher setpoint, which in this case is the setpoint 2 at +20 °C.

Switching to the lower setpoint

When the ambient temperature decreases, this causes the temperature of the camera to decrease as well. With further temperature decrease, the sensor temperature can fall below the current setpoint temperature. The TEC might be no longer required to cool the sensor to the adjusted temperature setpoint. If the sensor temperature no longer depends on the TEC cooling only, it becomes unstable.

To avoid temperature instability, the TEC switches down to the next setpoint, before the cooling power is reduced to the critical range at the current sensor temperature.

To keep the current sensor temperature as long as possible, the TEC does not switch down immediately when the Min. ΔT to the next temperature setpoint is reached. These points are marked in green in Figure 64. Note for better understanding the case temperature profile is shown in a simplified way that covers the whole temperature range.

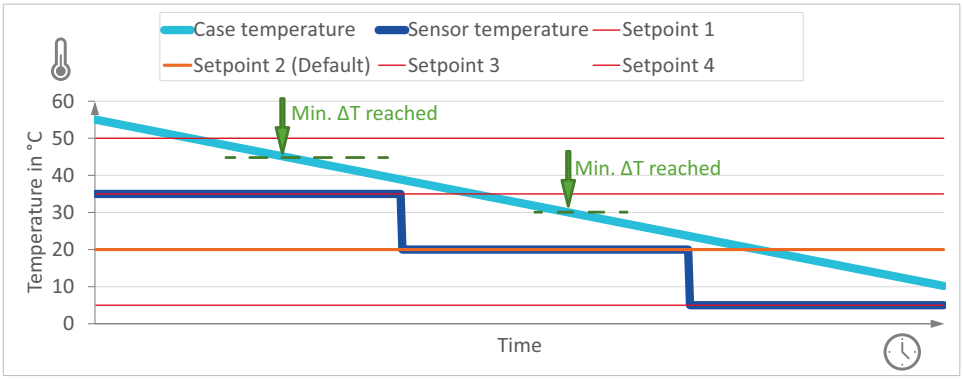

Figure 64: Schematic figure of setpoint switching downwards.

Special case: heating and cooling the sensor (G/CL-008 only)

Goldeye G/CL-008 models can actively heat up the sensor, enabling the TEC to operate at a sensor temperature that is higher than the case or ambient temperature.

When heating is enabled, the TEC does not need to switch down to a temperature setpoint that is below the current setpoint. As long as the case temperature is below the sensor temperature, the TEC keeps heating the sensor.

If required to keep the sensor temperature stable, the TEC automatically switches from heating to cooling, or vice versa.

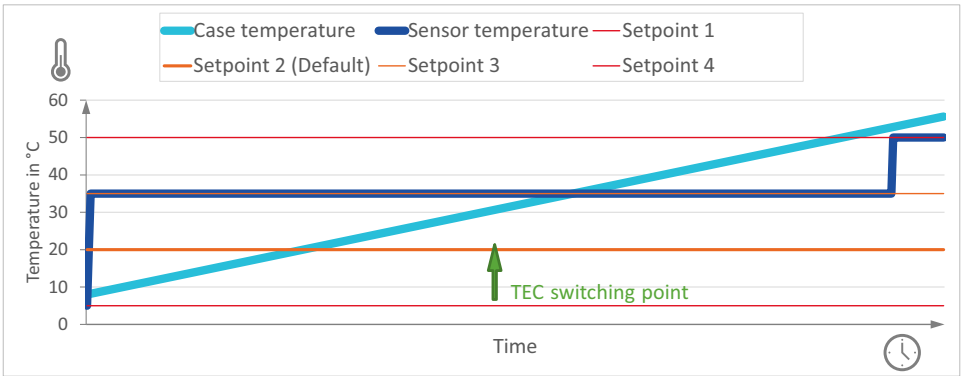

Figure 65: Schematic figure of TEC heating and cooling.

During operation, as long as the TEC does not actively cool the sensor, the sensor temperature usually is higher than the case temperature. So, even if the sensor temperature is below the current temperature setpoint, the TEC might still be

required to cool the sensor. The green arrow in Figure 65 shows this situation Note for better understanding the case temperature profile is shown in a simplified way that covers the whole temperature range.

The ability to switch to a higher setpoint, however, depends on the feature (`Reg`)`SensorTemperatureSetpointMode`:

- set to *`Auto`*, the TEC is able to switch to a higher setpoint, if it exists, as shown in Figure 65.
- set to *`Manual`*, the TEC is not able to switch to any other setpoint.

Switching the sensor off

If the internal camera temperature exceeds a preset alert limit, the camera's overheat protection circuit powers down the sensor board. This also includes the sensor cooling.

The Alert state is indicated by a continuous red light of the temperature status LED.

Temperature setpoint settling time

If the setpoint of the sensor temperature controller is changed, it takes approximately half a minute until the desired temperature is reached. During this period, the image quality may be reduced to some degree.

Example for Goldeye CL-033 TEC1

This example explains the functionality of the single-stage TEC1. It is shown in Figure 66.

The Goldeye CL-033 TEC1 has four temperature setpoints: +5 °C, +20 °C (Default), +35 °C, and +50 °C. It can achieve a maximum temperature difference of 25 K between housing and sensor.

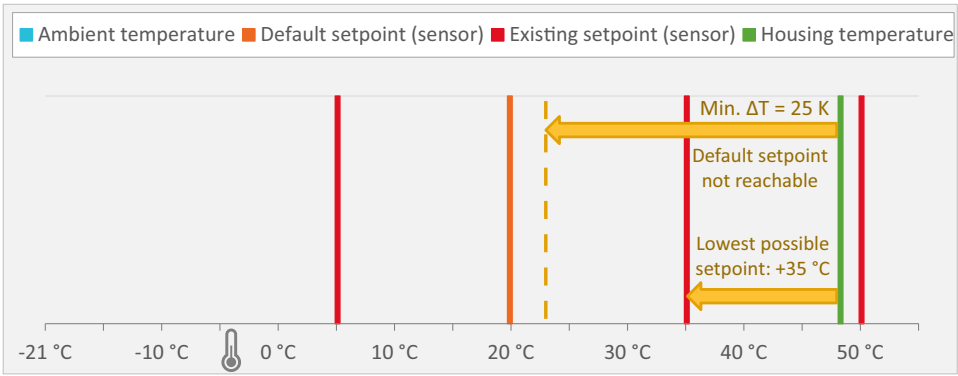

Figure 66: Cooling capabilities of Goldeye TEC1 models (example)

As a result, the CL-033 TEC1 switches to the lowest setpoint it can reach, which is at +35 °C, and keeps the sensor at that temperature.

For this example, it is assumed that during operation, the case temperature of a Goldeye CL-033 TEC1 has leveled at approximately +48 °C. Thus, the minimum sensor temperature the TEC can reach is +23 °C. It cannot reach the default setpoint at +20 °C.

Example for Goldeye G-032 Cool TEC2

This example explains the functionality of the two-stage TEC2.

The Goldeye G-032 Cool TEC2 has three temperature setpoints: -20 °C (Default), -5 °C, and +10 °C. It can achieve a maximum temperature difference of 60 K between housing and sensor.

For this example, it is assumed that during operation, the case temperature of a Goldeye G-032 Cool TEC2 has leveled at approximately +38 °C.

Because the temperature difference achievable is 60 K, the TEC can reach the default setpoint at-20 °C.

Thus, the G-032 Cool TEC2 will switch to the default setpoint at-20 °C and keep the sensor at that temperature.

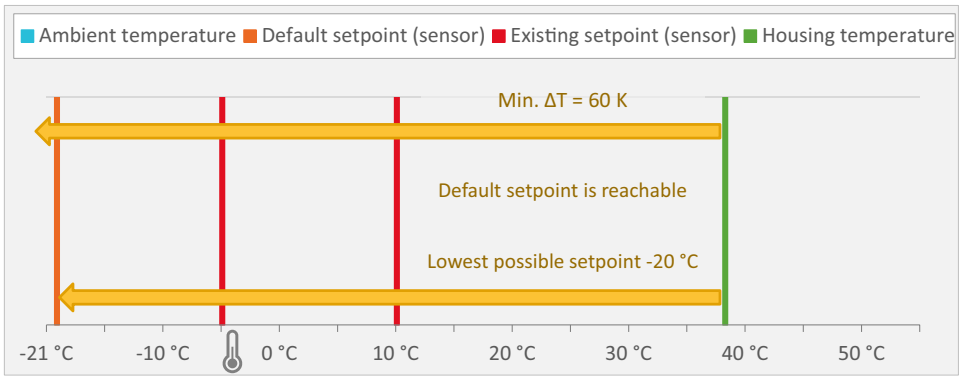

Figure 67: Cooling capabilities of Goldeye TEC2 models (example)

Example for Goldeye G/CL-008 TEC1

This example explains the heat functionality of the single-stage TEC1.

The Goldeye G/CL-008 TEC1 has four temperature setpoints:+20 °C, +25 °C (Default), +35 °C, +50 °C. With cooling, it can achieve a maximum temperature difference of 20 K between housing and sensor.

For this example, it is assumed that the camera is started at an ambient temperature of-5 °C. The camera is supposed to work at a sensor temperature of +35 °C. It is likely that through internal heat-up alone, the camera cannot reach the setpoint at +35 °C.

- If the `TemperatureControlTarget` of the camera **is not** activated, the camera levels the sensor temperature at the low setpoint of +20 °C.
- If the `TemperatureControlTarget` of the camera **is** activated, the camera heats the sensor and levels the temperature at the setpoint of +35 °C.

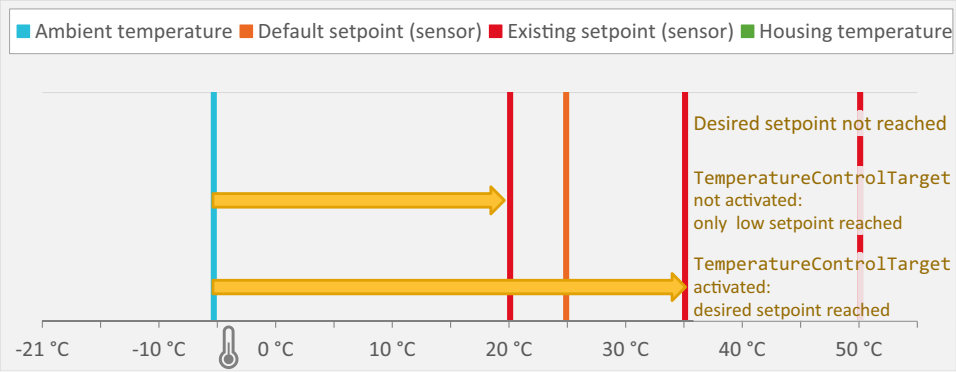

Figure 68: Heating capabilities of Goldeye G/CL-008 models (example)

Operational statuses

Table 142 explains the operational statuses that are indicated by the temperature status LED on the camera back panel.

For TECless cameras, the LED will either remain off, not indicating any TEC status; or it will turn red, indicating overheating.

Use an efficient heat removal device

If the camera has switched to **Alert** status, it is also recommended to provide a more efficient heat sink for the camera housing before resuming operation.

However, additional heat dissipation arrangements are always advantageous.

LED color flashing pattern	Status Description
	Off
Off	There are two cases when the LED remains off: • The TEC is actively switched off, using the feature `SensorTemperatureControlMode`. • The camera is a TECless camera that has no TEC available.

Table 142: Temperature Status LED (sheet 1 of 2)

LED color flashing pattern	Status Description
Green-red (flashing)	**Deviated** The sensor cooler is operating, the defined sensor temperature (setpoint) has not been reached or stabilized yet. This signal is no error signal.
Green (continuous)	**Stable** The temperature is stabilized at one setpoint, the camera operates optimally.
Red (flashing)	**UpperLimit** The sensor cooler operates at its upper power limit. The cooler is not able to keep the set temperature; however, the critical temperature level has not been reached yet. Under warm ambient temperatures, consider red flashing for an extended period of time as a warning signal: if the camera keeps working under unchanged conditions, an emergency shutdown is likely. The image correction quality may also deteriorate during this stage.
Red (flashing)	**LowerLimit** The sensor cooler operates below its lower power limit. Under cold ambient conditions, the cooler may not be required to keep the sensor temperature at the lowest setpoint. The image correction quality may also deteriorate during this stage.
Red (continuous)	**Alert** If the internal camera temperature exceeds the defined threshold temperature, the sensor and the critical electronics of the sensor board conduct an emergency shutdown to prevent overheating. This is called the Alert state. It is indicated by the LED continuously glowing red. In case of Alert, the red color of the LED does not change even if the camera cools down again. The camera can be restarted only manually by switching the power off and on again. This is possible only after the camera cooled down sufficiently.

Table 142: Temperature Status LED (sheet 2 of 2)

Features for temperature control

Feature names	Register names
SensorTemperatureControlMode	RegRelativeHumidity[ ]
SensorTemperatureSetpointMode	RegRelativeHumidityInq...
SensorTemperatureSetpointActive	DeviceSerialNumber
SensorTemperatureSetpointSelector	RegTemperature[ ]
SensorTemperatureSetpointActivate	RegTemperatureInq...
SensorTemperatureSetpointValue	RegSensorCoolingPower
SensorTemperatureTargetSetpoint	RegSensorTemperatureControlMode
DeviceTemperatureSelector	RegSensorTemperatureControlState
DeviceTemperature	RegSensorTemperatureSetpointActivate
DeviceRelativeHumiditySelector	RegSensorTemperatureSetpointActive
DeviceRelativeHumidity	RegSensorTemperatureSetpointMode
SensorCoolingPower	RegSensorTemperatureSetpointSelector
SensorTemperatureControlState	RegSensorTemperatureSetpointValue
	RegSensorTemperatureSetpointValue

Table 143: Features and register names for temperature management

More information on temperature and humidity features:

Table 143 lists the features available to control temperature and humidity.

Find detailed descriptions of the features controlling the temperature and humidity correction and the functionality associated with them in the Goldeye G/CL Features Reference.

www.alliedvision.com/en/support/technical-documentation/goldeye-gcl-documentation.html

Firmware update

101001
010011
110100

This chapter explains the firmware update of Goldeye G/CL cameras.

Firmware loader application

Allied Vision provides an application for Goldeye cameras that loads firmware to the camera, using a simple interface. New feature introductions and product improvements motivate new firmware releases. All users are encouraged to use the newest firmware available and carry out a firmware update if necessary. Updating the firmware takes a few minutes.

As long as a firmware update is in progress, the status LED indicates this with a 1 Hz green-red flashing.

Do not power off during the firmware update.

Ensure that you never power off the camera during the firmware update until the firmware update is complete, and the camera reboot has been completed.

Both firmware update and reboot are indicated by a 1 Hz green-red flashing of the status LED.

Not complying with this requirement might damage the camera and render it unusable.

How to obtain the latest firmware version

The firmware for Goldeye G/CL cameras is subject to export limitations. Thus, it is not available via public download.

To update the firmware of your Goldeye G/CL or Goldeye G Cool camera, contact the Allied Vision support team.

www.alliedvision.com/en/support/contact-support-and-repair.html

Registered customers may freely contact Allied Vision support via email:

support@alliedvision.com

Cleaning optical components

This chapter includes instructions on camera cleaning.

Clean optical surfaces only

If any solid or fluid substances penetrated the camera body, never attempt to remove them. This can cause further damage to the camera.

Should that happen, always contact your Allied Vision distribution partner.

Avoiding the necessity of camera cleaning

The best way to ensure the camera remains clean is to avoid penetration of foreign substances into the camera.

When mounting or dismounting a camera lens or dust cap, always hold the camera with the mount opening pointing downwards. This minimizes the possibility of any contaminants falling on the glass surface.

Always store cameras and lenses with dust caps on.

Figure 69: Illustration of camera orientation when removing lens or dust cap

Identifying contaminations

If small visible dust or contamination particles on glass surfaces can be observed from the outside, this does not necessarily mean that these particles affect the functioning or application of the camera.

Because these particles are out of focus, they are not likely to have any impact on the image. An impact on the image may only be given if any particles can be observed in the video preview of your camera.

The contaminations you observe in the video preview may be situated either on the lens, on the filter or protection glass, or on the sensor. Contaminations may develop due to handling or unclean environments, even if your camera has been cleaned prior to sealing and shipment.

As shown in Figure 70 , contamination (dust, particles, or fluids) on the sensor or on optical components may appear as a dark area, patch, or spot on the image and remain fixed in the preview window while you rotate the camera over the target.

Also, contaminations that are situated on the edge of lens or filter, may not be in the field of view, and therefore will not be visible in the image.

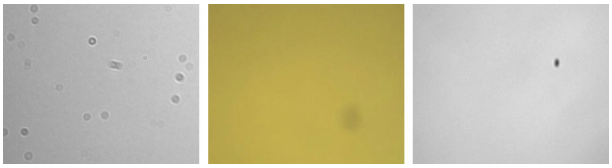

Figure 70: Examples for the appearance of dust on the filter (left and middle), and the sensor (right)

Do not confuse a contamination with a pixel defect, which appears as a distinct point. Particles can either rest loosely or can be stuck to the optical surface.

Where is the contamination? — Locating contaminations

Before dismounting the lens, you should determine whether the contamination is situated on the filter, lens, or sensor. To do so, capture a uniform image with the camera, for example a white sheet of paper. The affected optical surface is identified when optical component in question is moved (rotated) and the dirt follows this movement.

- If you rotate only the lens (not the camera) and the contamination moves as well, the contamination is on the lens.
- If you move the filter or protection glass window and the contamination moves as well, the contamination is on the filter or protection glass.
- If the contamination is neither on the lens nor the filter or protection glass, it is probably on the sensor.

Removing filter or protection glass

Malfunction of the sensor possible when removing the filter or protection glass.

- Removing the filter from the camera requires special care.
- If a special mounting tool is required, you must use this tool. Do not use any makeshift tool.
- Ask your distribution partner for assistance if you are not confident with the procedure.
- Never touch optical surfaces with bare hands

Take special care when removing the filter or protection glass.

NOTICE

Damage to the sensor possible if no protection is present.

Removing the lens or dust cap on these cameras immediately exposes the sensor.

Always ensure that you are not inadvertently damaging the sensor surface.

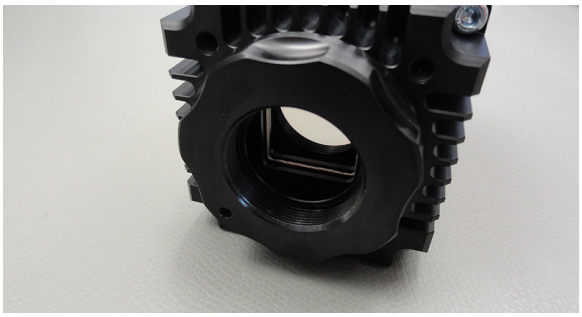

Figure 71: Camera mount without filter, directly exposing the sensor.

Cleaning instructions

NOTICE

Using improper cleaning materials may damage glass and sensor surfaces.

- Never wipe lenses with dry swabs or tissue- this may cause scratches.
- As a cleaning tool, use only lens cleaning tabs or a lens cleaning tissue wrapped around a small piece of plastic. The lens cleaning tissue must be chemically pure and free from silicones and other additives.
- Do not use metal tools.
- Do not use any disposable cotton cosmetic swabs; they may contain
- contaminants.
- Do not use cosmetic cotton.
- Do not use consumer eyeglass cleaning cloths pretreated with silicone.
- Do not use fibrous material that may get caught in small gaps.
- As cleaning liquid, use only isopropyl alcohol.
- Never use aggressive cleaners like benzine or spirits. Using cleaners like that may damage the surface.

Carry out all cleaning operations (on lenses, filter or protection glass, and sensor) in a **clean dust-free room**. The optical components are very fragile. Therefore, you must not touch them with your fingers or any hard material.

1. Unplug the camera from any power supply before cleaning.
2. Have the cleaning materials ready before you start the cleaning.

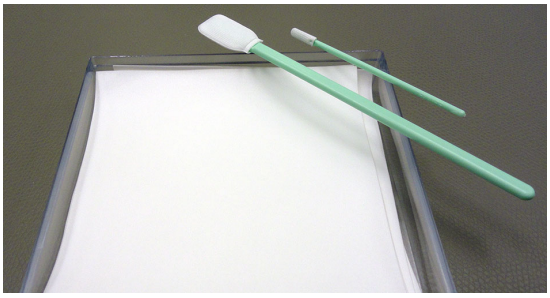

Figure 72: Lens cleaning tissues and cleaning pads.

3. Apply a small amount of cleaning liquid to a clean, new lens cleaning pad or tissue.

   The pad or tissue should be moist, not dripping. Hold the camera away from your body to avoid that particles like skin flakes fall onto the sensor. The camera front should point roughly 45 degrees upwards.
4. Wipe the glass surface in either one of two ways described below to ensure any dirt present on the surface be moved to the edge of the surface:
   - With a spiral motion from the center to the rim. Normally, several spiral wipes are recommended. Wipe only on glass avoiding contact to metal surfaces, because microscopic dirt could be released and could cause scratches on the glass.

- With a straight motion across the glass surface from one end to the opposite end.

5. When you've finished cleaning, examine the surface in a strong light. Take an out-of-focus picture of a flat, illuminated surface to see if any dirt or dust remains.
6. If dust spots remain, repeat this procedure once, using new clean lens tissue (as described above).

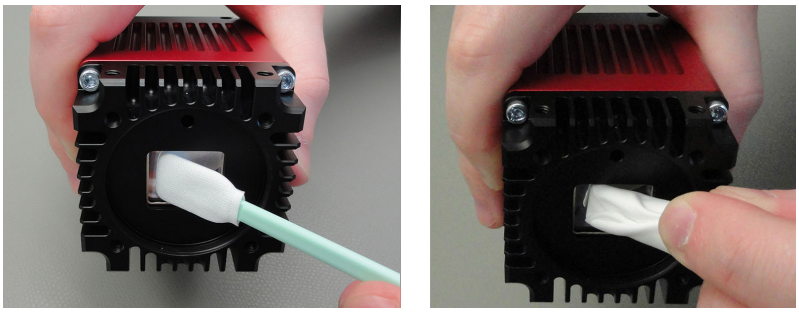

Figure 73: Use of cleaning tab or tissue to clean a sensor.

If dust spots remain

If dust spots remain after cleaning twice, contact your Allied Vision distribution partner.

Use of compressed air

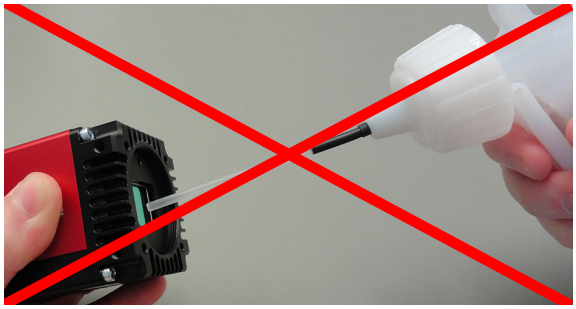

Figure 74: How not to use compressed air

NOTICE

As a general precaution, you should never use compressed air to clean a camera.

If you want to use compressed air despite of all warnings, consider the following:

- Use an air blower or compressed air only if you are familiar with cleaning a camera with this instrument.
- Compressed air may blow dust into cameras and lenses.
- High pressure air may crack the sensor or glass you want to clean.
  - Therefore, keep the pressure at a moderate strength only.
  - The pressure at the tube should be less than 1 bar
  - Operating distance: 5 to 30 cm
- The pressurized air must be dust-filtered and oil-free.
- Use ionized air only to avoid any static charge.
- Also, using ionized air helps to remove any dirt stuck to the optical component because of static electricity.

Index

E

F

G

H

I

L

M

N

O

P

Q

R

S

T

U

V

W